Analysis of the Medieval Pottery from Friary Field, Dunstable

By
Mark Green and Barry Horne

1. INTRODUCTION

A detailed description and analysis of the medieval pottery found during the Manshead Archaeological Society's 25 years of excavations on Friary Field is the objective of this report. The changing personnel involved in excavation and analysis over this considerable period has caused a number of difficulties which will become apparent from a full reading of the report. Nevertheless, the delay in publication has allowed the latest ideas and interpretive techniques to be brought to bear on the complete corpus of pottery. Great thanks are due to Evelyn Baker and her staff at the Archaeological Field Team of Bedfordshire County Council Planning Department for their assistance with this process.

As a future full publication on Medieval Dunstable will include all the evidence and differing material from Friary Field, this report only contains such wider details on the site and features as are essential to place the pottery in context. It is hoped that the more wide-ranging paper will reproduce or reference the information given here with a comprehensive interpretation of the total evidence.

2. THE SITE

Brief History of the Excavations

Friary Field (OS ref TL1234) was an open grassed area with mature trees in the south-west quadrant of Dunstable as delineated by the A5 (Watling Street) and B489 (Icknield Way). It was long-assumed that the field overlay the remains of the medieval Dominican Friary, one of Dunstable's two religious houses. The other was the Augustinian Priory of which St Peter's church is the surviving remnant. An early dig in 1924, by T. W. Bagshawe (Martin & Bagshawe, 1927), encountered the Friary walls in an area adjacent to Friary Field to the east. The Manshead started excavations in 1965 after a watching brief on the digging of a storm drain trench across the field revealed a medieval oven and some Totternhoe stone walling. This was the start of the Society's long association with the site where excavations continued until 1980.

The original intention was to reveal the Dominican Friary and this formed the first phase of medieval investigations, with results published in Manshead Journal numbers 16 and 17. A second phase began upon discovery of the system of cross-shaped features and related trenches which are described below. Towards the end of operations on the site, a number of further medieval features were found, notably the "Timber Building". A separate DOE-organised dig under the direction of Dr. Ian Stead took place in 1972 (Havercroft, 1974) but the pottery found is not included within this analysis.

Over the years, the site proved a wonderful location for the Society, yielding enormous evidence of both Roman and Medieval Dunstable. At times, it was somewhat difficult to place features in the appropriate period, especially when both Roman and medieval ditches coincidentally followed the same groundplan or a medieval feature neatly fitted a Roman "theory"! Nevertheless, sound archaeological principles prevailed, under the guidance of the Society's late Site Director Les Matthews, and the story of Friary Field in both periods revealed and mapped. The extensive Roman cemetery discovered along with wells and pits from the same era has been published elsewhere.

Archaeological investigations ceased in 1980 when the site was developed into an up-market housing estate now known as Friary Field. A short reprise took place in 1990 when the owners of one of the houses bordering the original field allowed the Society to dig an area in their garden which was to become a swimming pool. An old acquaintance with one of the major medieval features, the "Buttress Trench" (see below) was thus renewed.

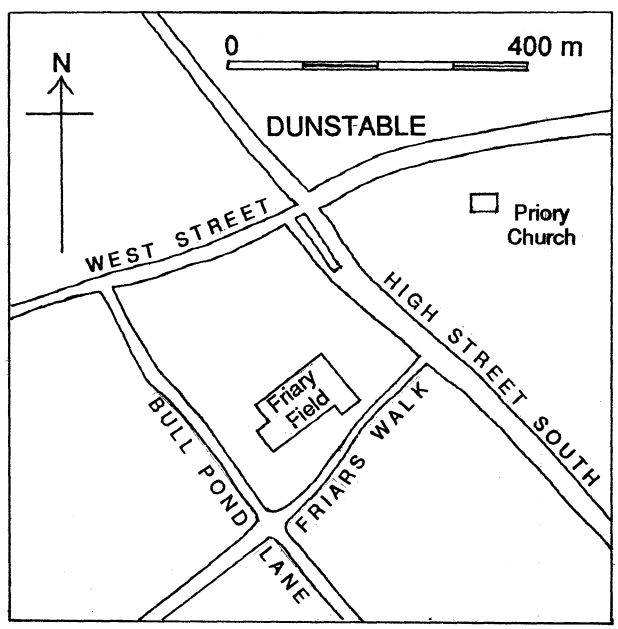

Figure 1. Location of site.

Principal Features

Figure 2 is a plan of the site with all medieval features illustrated. The feature numbers used were allocated during analysis of the pottery to aid that process. This explains the use of number six to refer to all surface and unprovenanced material i.e. five features had been examined before a decision was taken to designate pottery found in the topsoil of each "proper" feature as a single group for analysis. The features can best be summarised as follows.

The Friary Structures

Feature 2 ("Kitchen and Guest House") delimits the major domestic structures of the Dominican Friary remaining at foundation level. A detailed plan of this area is shown in figure 3. Pottery was also found in three other features given separate identities although lying within or very close to Feature 2. These are Features 4 (posthole), 22 ("Wattle and Daub Walls") and 26 (pit).

There appeared to be three different periods of construction of the Friary kitchen and related buildings from the evidence found in the 1965-66 excavations. In the first phase, a timber-framed structure some 12m by 4.9m with an earth floor and clay oven was erected in the thirteenth century. This date was based on the pottery found and tied in with the documented foundation of the Friary in 1259. The second phase saw the replacement of the timber building with one of dressed Totternhoe stone and knapped flints. Carved Totternhoe stone in the rubble fill of the walls indicated the enlargement of the kitchens after the building of the church. Four separate rooms existed and there was evidence of a stairwell to an upper storey. One room (number 4) contained a large tank and an oven. Three underground ovens, built of Totternhoe stone and tiles, were discovered outside the kitchen structure. No firm clues as to date were forthcoming from this second phase. Phase three was an alteration where the eastern wall was rebuilt to insert a fireplace and chimney in room 3. This probably took place in the fifteenth century given the introduction of chimneys at that time. The old oven and tank in room 4 were replaced by two beehive ovens of brick and tile construction, one built into the new wall.

Sections of the Friary western boundary wall were revealed (see figure 2) but no associated pottery was found. A small wall section excavated at the north of the site (Feature 18) may have been the northern boundary wall and some pottery was discovered here. Just outside the western wall, Feature 25 ("Toilet Pits and Ditches") yielded useful amounts of pottery.

Destruction Rubble

After the dissolution, the Friary was probably used as a "quarry" as was the nearby Augustinian Priory. A considerable amount of the rubble from the levelling of the Friary remained in a large mound to the north and east of the kitchen area. Several long sections were cut through the mound and a large quantity of pottery found amongst the destruction remains. This has been analysed as Feature 7. No walls were found in situ but a cleared level area underlying the mound may have been created for the foundations. It was in one of the sections that the famous Dunstable Swan Jewel, now in the British Museum, was unearthed.

Environs of the Friary

Four features were investigated to the east of the Friary kitchens which may or may not have had connections with the Friary. Feature 1 consisted mostly of sleeper beam trenches for a timber-framed building, Features 9 and 15 were cellars and Feature 17 was a pit beneath the destruction rubble. All contained medieval pottery.

Crosses and Wall Trenches

This series of features represents one of several "Great Mysteries" which the Manshead has uncovered over the years. Four sets of cross-shaped holes were dug into the natural chalk to the west of the Friary, each surrounded by a "wall" trench. Each set comprised twelve crosses running east-west and six north-south, making 72 per set. Only one complete set lay within the confines of Friary Field and not all crosses were excavated but sufficient investigations were made to assume the accuracy of the above description with great confidence.

For analysis purposes, four separate series of feature numbers were given to the crosses 501-572, 573-644, 645-716 and 717-788 respectively. Only three of the surrounding wall trenches had sections excavated and these are Features 28 (around crosses 501-572), 29 (around crosses 573-644) and 30 (around crosses 645-716).

Each cross was approximately 3.5m across with the centres about 4.7m apart. The length of the arms varied between 0.6m and 0.9m and the width between 1.5 and 1.8m. Depth varied but was on average 0.6m below natural chalk level. An interesting piece of evidence suggests one reason for the variance and also that

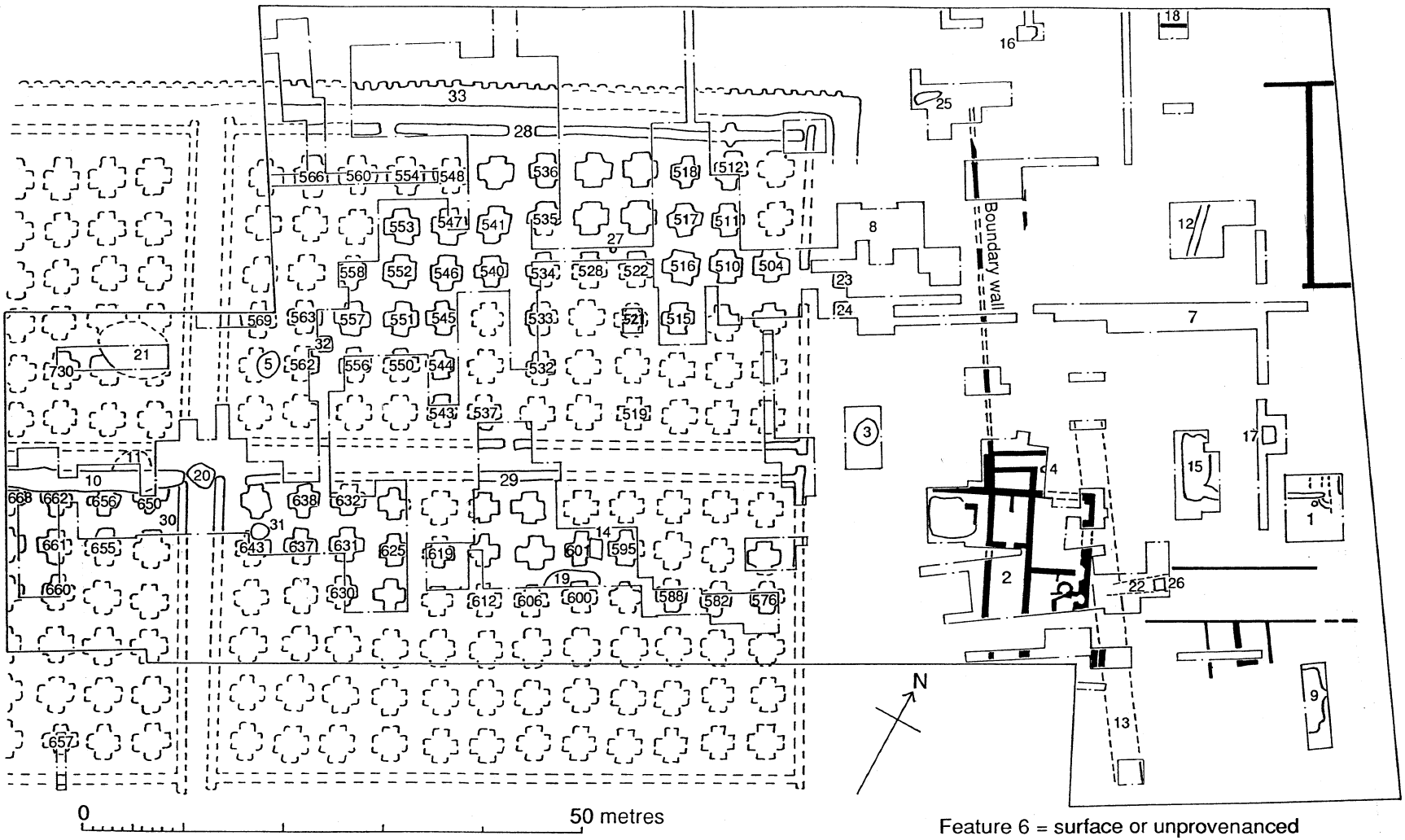

Figure 2. Friary Field site plan showing features. Areas excavated by the DOE are not shown.

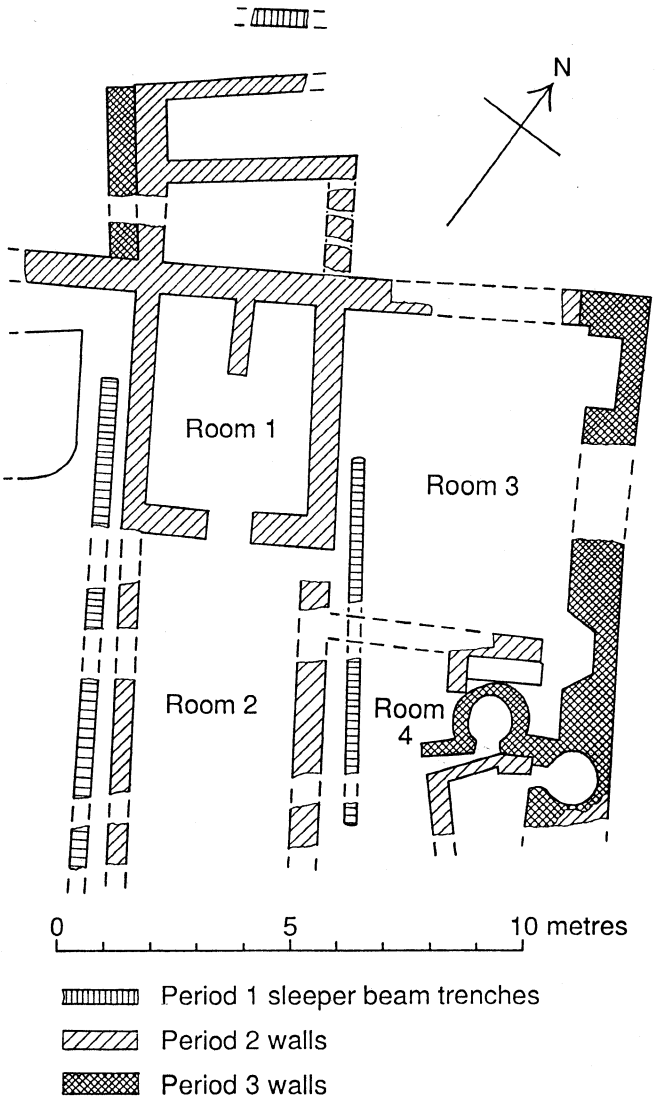

Figure 3. Kitchen and Guest House.

different gangs of diggers with different superstitious beliefs were employed. The crosses overlay a Roman cemetery and the diggers often came across human bones. Some crosses were aborted at a shallow level when bones were disturbed but others were cut right through skeletons to reach their appointed depth. Many tonnes of chalk would have been carted away and many tons of the light loamy fill imported. To and from where? The purpose behind such a major operation has been discussed as widely as possible within archaeological circles without any confident hypotheses being put forward. There also appear to be no known parallels from other religious houses. Most remarkable of all, the annals of the neighbouring Priory, which were maintained throughout the period of the Friary's existence, make no mention of anything which could be connected with the crosses. Other historical documentary sources are equally silent on the subject.

Many theories have been aired to explain the phenomena from an enormous building through gardens and vineyards to (good old) ritual practices. The most popular of these and perhaps the one which fits the evidence most closely is that of large formal gardens surrounded by either walls or hedges. Certainly no frost damage was evident around the edges of the cuts into the chalk suggesting their immediate filling with soil.

Buttress Trench

Feature 33 is the "Buttress Trench". This appears to be associated with the crosses and runs parallel with the northernmost section of wall trench surrounding the main set of excavated crosses. The trench was sunk 0.7m into the natural chalk with a regular series of slots (assumed to be for buttress posts) protruding from the northern side giving the impression of crenellations on the plan view. The slots were dug to a depth 5 to 7.5cm above the main trench floor. Again, the purpose is unknown. When the favourite theory to explain the crosses was as foundations for a massive building, this trench was conceived as a foundation for a veranda or perhaps grandstand. The latter idea relates to documented references to medieval tournaments at Dunstable.

The main excavations of the buttress trench took place in the 1970s but an opportunity to verify that it extended along a second set of crosses came in 1990 when a dig was permitted in the garden of a house adjacent to the former site. Proof was indeed found when the trench was discovered precisely where expected.

Miscellaneous Features

Numerous medieval pits, cess pits and ditches were found across the site. This category covers Features 5, 8, 10-14, 16, 19- 24, 26 and 31. Pottery was also found in a post hole (Feature 27) between crosses 522 and 528 and on a cobbled sunken floor (Feature 32) between crosses 562 and 563. Some medieval pottery appeared in the uppermost layers of certain Roman features hence the designation of a Roman cess pit as Feature 3 and a Roman ditch as Feature 13 in this analysis! As already mentioned, the medieval pottery found in topsoil or which could not be proved as originating from any feature was designated as Feature 6 (surface and unprovenanced) for analysis purposes.

3. METHOD OF ANALYSIS

Background to the Analysis

Although excavation on Friary Field continued from 1965 to 1980, the continuous programme of field work carried out by the Manshead Society in and around Dunstable during and since that period, plus the publication of other sites, did not leave sufficient time for the detailed study of medieval pottery. The only assessment published so far has been that in the Society's Journal in the mid-1960s. This was based on the general appearance of pots and sherds, their texture and glazing.

The initial description suffered from the relatively poor understanding of medieval pottery in the archaeological world at that time and for much of the period since then. This contrasts with the much-researched and well-documented pottery of the Roman period. Most of the medieval age operated with primarily local and regional products and trade as opposed to the national and international economy of the Roman world. The origin and date of particular examples of pottery are therefore very difficult to trace. Brill, near Oxford, has been the best-known medieval production centre for some time and the main source of parallels for Dunstable pottery since the 1960s.

Logging and quantifying of the Friary Field material was carried out as it was excavated but nothing more. The Society embarked on a thorough examination of the material in 1983. Four years of research followed.

The majority of sherds were coded using a method now out of favour, namely the allocation of a three-letter code to all finds at a particular depth. A log was kept of the codes with a description of the feature and depth. As no other means of identification existed on the sherds, this led to a number of problems where the code was not clear or the log entry not specific enough. Consequently, the content of the "unprovenanced" category increased but not sufficiently to prevent the confident assignment of the vast majority of the assemblage to its correct feature. Altogether, the "re- excavation" of pottery after nearly 25 years was a fascinating experience!

Great advances in knowledge regarding medieval pottery have taken place in the last 20 years both from the number of sites excavated and reported and from the analysis techniques used. It was the Society's intention to take advantage of these advances especially fabric typing using microscopic analysis and computerised data storage and interpretation.

The Bedford Methodology

The most recent and comprehensive local publication concerning medieval pottery was Bedfordshire Archaeological Journal number 13 covering excavations in Bedford from 1967 to 1977. We therefore contacted Evelyn Baker, the Archaeological Field Officer at Bedford, to discuss our material and seek advice on the method of analysis. At this time (1983), Evelyn was conducting excavations at Grove Priory near Leighton Buzzard. Considerable quantities of medieval pottery had been found at Grove (which is only 19km from Dunstable) and there were great similarities with coarse wares from Friary Field. Analysis of the Grove pottery was being undertaken by Georgie Brine of the Bedford Field Team. After visits between the Bedford and Dunstable personnel and examination of each other's material, there was mutual agreement that we use the Bedford Methodology and log our results on the Field Team's computer.

At the heart of the analysis method used at Bedford is a series of fabric types intended ultimately to link in with a national series. All finds by the Bedford unit are included and the series is continually updated with any new types which come to light.

The method relies on an extensive description of all sherds found within a feature and includes fabric type, vessel type, weight, proportion of rim, rim type, base type, handle type, spout type and decoration. These details are then recorded on computer for statistical analysis by a variety of programs. Given that very basic data has been stored, it is always possible to write new programs to ask different questions without any re-examination of the material - a very powerful way of testing hypotheses and forming views.

Throughout the period of analysis, Manshead members attended meetings of the South-East Midlands Pottery Experimental Research (SEMPER) group, where professionals and amateurs from archaeological units, museums and societies discuss their work on pottery from the saxon period through to late medieval. This group was very helpful in raising our understanding of the Friary Field material itself and its place in the wider studies of medieval pottery. In particular, Alan Vince of the Museum of London assisted our work and took a sufficient interest to visit us at Dunstable and to invite us to the Museum to explain his research into Medieval London.

Our four years' work were duly completed and the results are presented below. A debt of gratitude is due to Georgie Brine for the time and trouble she went to to bring us "up to speed" on the analysis method and her previous results. Also thanks to Evelyn Baker for

allowing the use of facilities at Bedford Museum and County Council offices.

As a footnote to this section, the Manshead Society now possesses its own computer and has the pottery data stored with the ability to reinterpret as required.

Basic Classifications

Fabrics The Bedford researchers had used 'B' types in the fabric series to denote wares with shelly inclusions and 'C' types wares with a mineral (usually quartz) temper. We found some parallels amongst the Friary material and have used the same designations. Where no parallels existed , we allocated 'M' (Manshead) types. Altogether, 42 different fabrics were found.

Weight An older approach to pottery quantification has been to simply count individual sherds. Weight is obviously a more accurate means of comparing the presence of different fabrics and also gives a more realistic idea of the volume of pottery found.

Estimated Vessel Equivalence (EVE) This is another method of quantification aimed at providing a comparison factor for the number of separate pots present in the category being examined i.e. fabric type, vessel type, feature, etc. Body sherds are of no use here unless very time-consuming (and possibly dubious) reconstructions are attempted. Therefore, only rim sherds are used. A fabric type is allocated and the proportion of rim assessed by placing the sherd on a chart of concentric rings of varying diameters with fractions marked off. A range of 0.01 to 1.00 is used. Computer programs can then count the overall total of rim fractions for any desired analysis category. Although the total will considerably understate the actual number of pots, it should provide the basis for a fair comparison between analysis categories. When taken together with weight, an even more useful comparison can be made. For example, if fabric type Ml has an EVE factor of 4.2 and a weight of 500 grammes and M2 has an EVE factor of 6.7 and a weight of 200 grammes, it can be seen that M2 has more but smaller pots than Ml.

Vessels In all, 17 different classes or forms of vessel (e.g. bowl, jug, jar) have been used in the analysis (see figure 4 for a complete list). The allocation of a vessel category to particular sherds is sometimes subjective but consistency has been strongly attempted. Where no form is discernible, sherds have been described as "body sherds".

Rims The basic range of medieval rim shapes was established by the Bedford team with 27 types. We added a 28th as a result of our analysis (see figure 5). The types progress from simple to complex profiles but there are no date implication in this. There are many variations or sub-types within each basic category. A full set of the Variations found at Bedford is not shown in this report but an example of every Friary Field sub-type is illustrated. See figures 12a-d for full range.

Bases The Bedford range of 10 basic types (see figure 6) was not increased by our work.

Handles At Bedford, 8 different types of pot handle were identified. We have added 3 further types (see figure 7 for section views).

Spouts See figure 8 for the 4 Bedford spout types which proved sufficient for our analysis.

Decoration A basic series of applied decoration types - stabbing, stamping, rouletting, etc. - was set down by Bedford. Figure 9 shows the full range of 79 types including some only found in the Friary Field material. Further decoration type numbers were used to describe different glazing treatments and yet more types to denote markings or shaping produced during manufacture-usually on a wheel.

Analysis Sequence

The five steps in the process used to compile the detailed information on the material were as follows:-

1. Assemble all sherds for a feature (using original codes to confirm and separating out any unprovenanced sherds and those suspected of being found in topsoil).
2. Group by fabric type, using microscope where necessary.
3. Split into body sherds, rims, bases, handles and spouts.
4. Complete "Manshead Assemblage Data Sheet" (see figure 10 for example). A single entry to be made for body sherds but a separate entry for each typeable sherd. All relevant typological designations to be included plus whether drawn (or to be drawn) and any special comments e.g. method of handle attachment. A reference number to be shown where pot is complete.

NB: Original code letters to be logged on sheet to link old/new recording methods but not entered on computer.

5. Enter via computer and store on magnetic diskette.

1. Bowl
2. Bung
3. Cistern
4. Cooking pot
5. Cup
6. Dish
7. Drip pan
8. Jar
9. Jug
10. Lid
11. Pan
12. Platter
13. Pitcher
14. Saucepan
15. Storage jar
16. Skillet

Figure 4. List of forms.

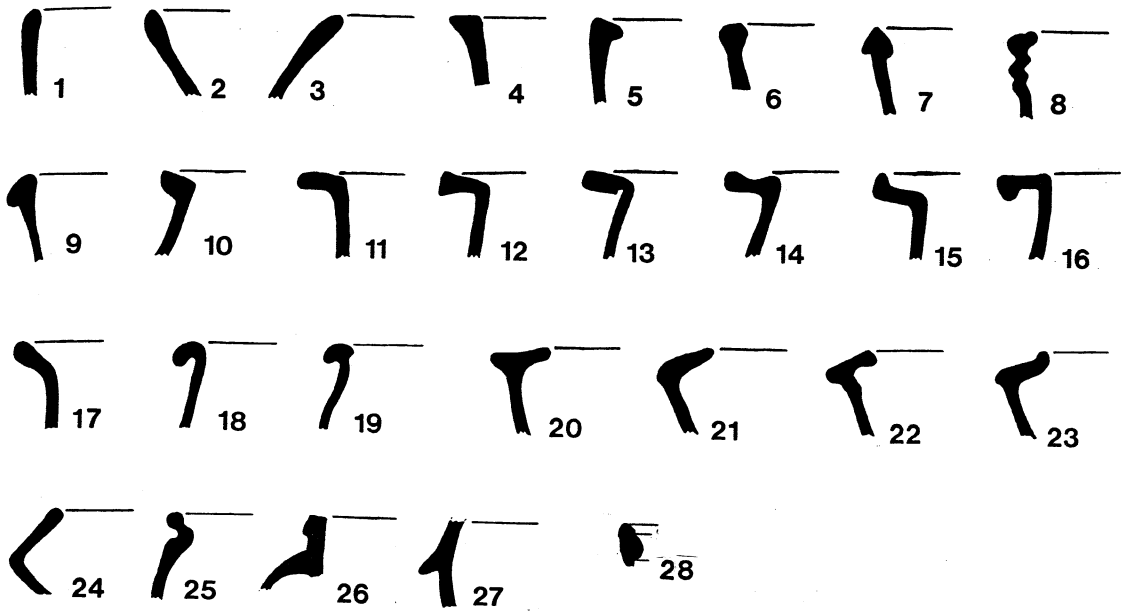

Figure 5. Main Rim Types. (With permission of Evelyn Baker)

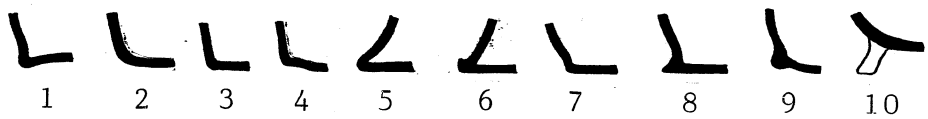

Figure 6. Bases.

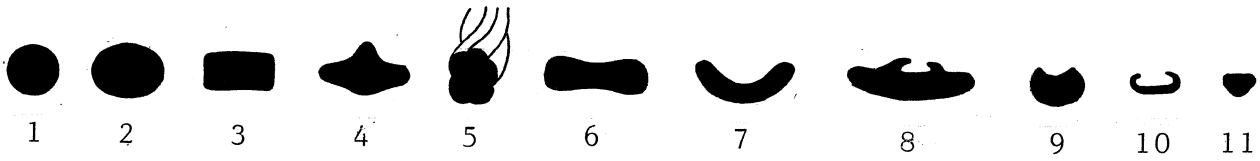

Figure 7. Handles.

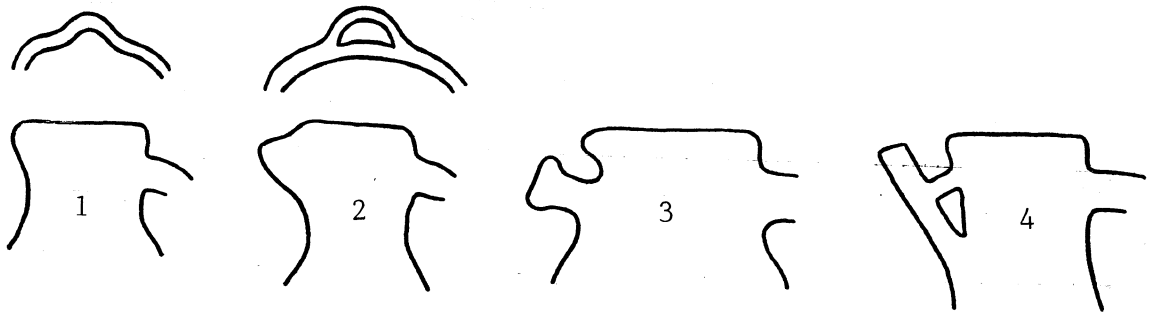

Figure 8. Spouts.

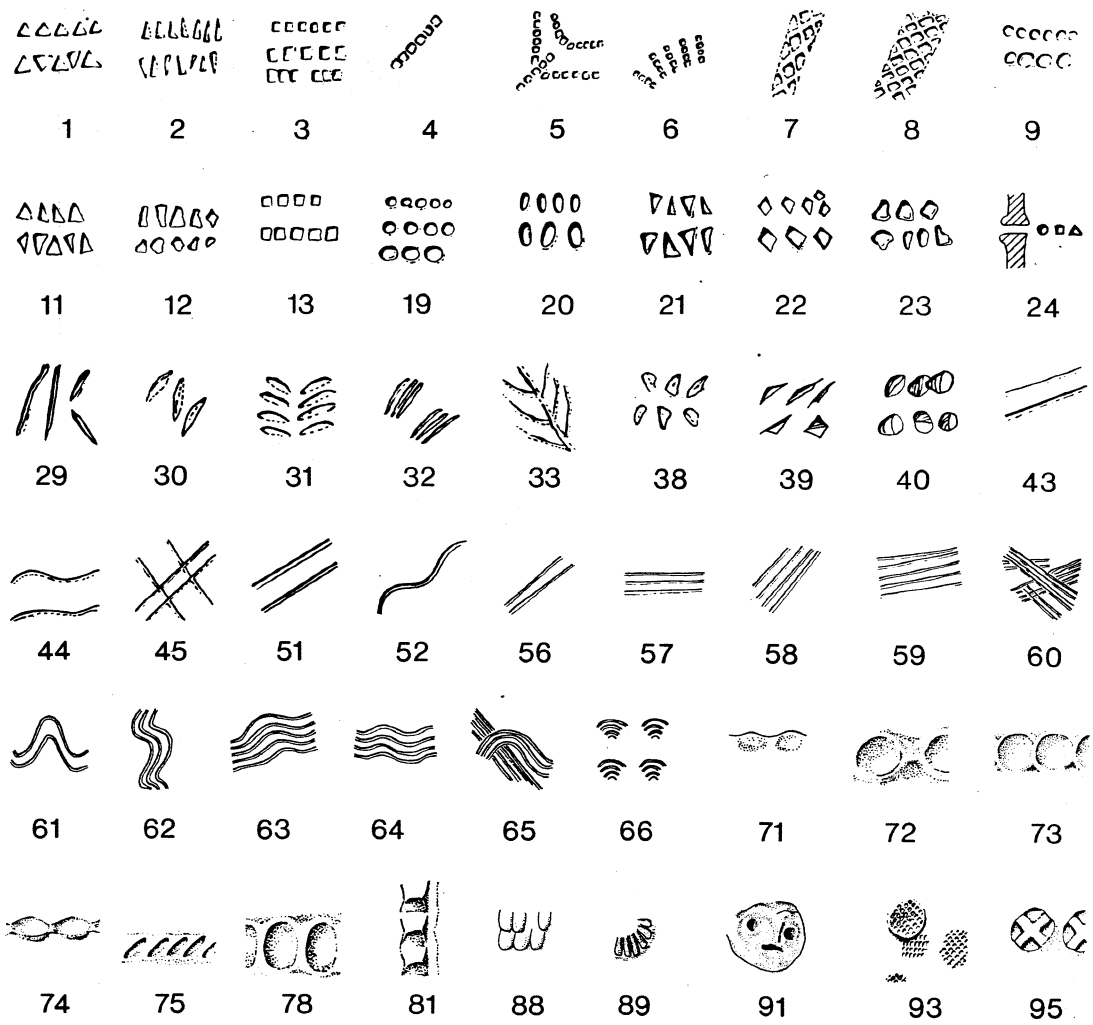

Decorative elements used in the analysis: 1 – 9 rouletting, 11 – 13 rouletting/stabbing, 19 – 24 stabbing, 29 – 33 slashing, 38 – 40 knife cuts, 43 – 45 incised line, 51 – 52 excised line, 56 – 66 combing, 71 – 75 direct thumbing, 78, 81 applied strips, 88 – 91 applied motifs, 93 – 95 stamps.

Figure 9a. Decoration types. (With permission of E Baker)

4. THE MATERIAL

The fabrics

As previously mentioned, the fabric classification was that originated by the Bedford team. Described here are the fabrics found in Dunstable which do not appear to have an equivalent in the Bedford series. Also included are C9, C11A and C11B.

C9 - green glazed

Coarse fabric with many medium size light and dark brown quartz inclusions. Inclusions very obvious. This has been identified as a Brill fabric.

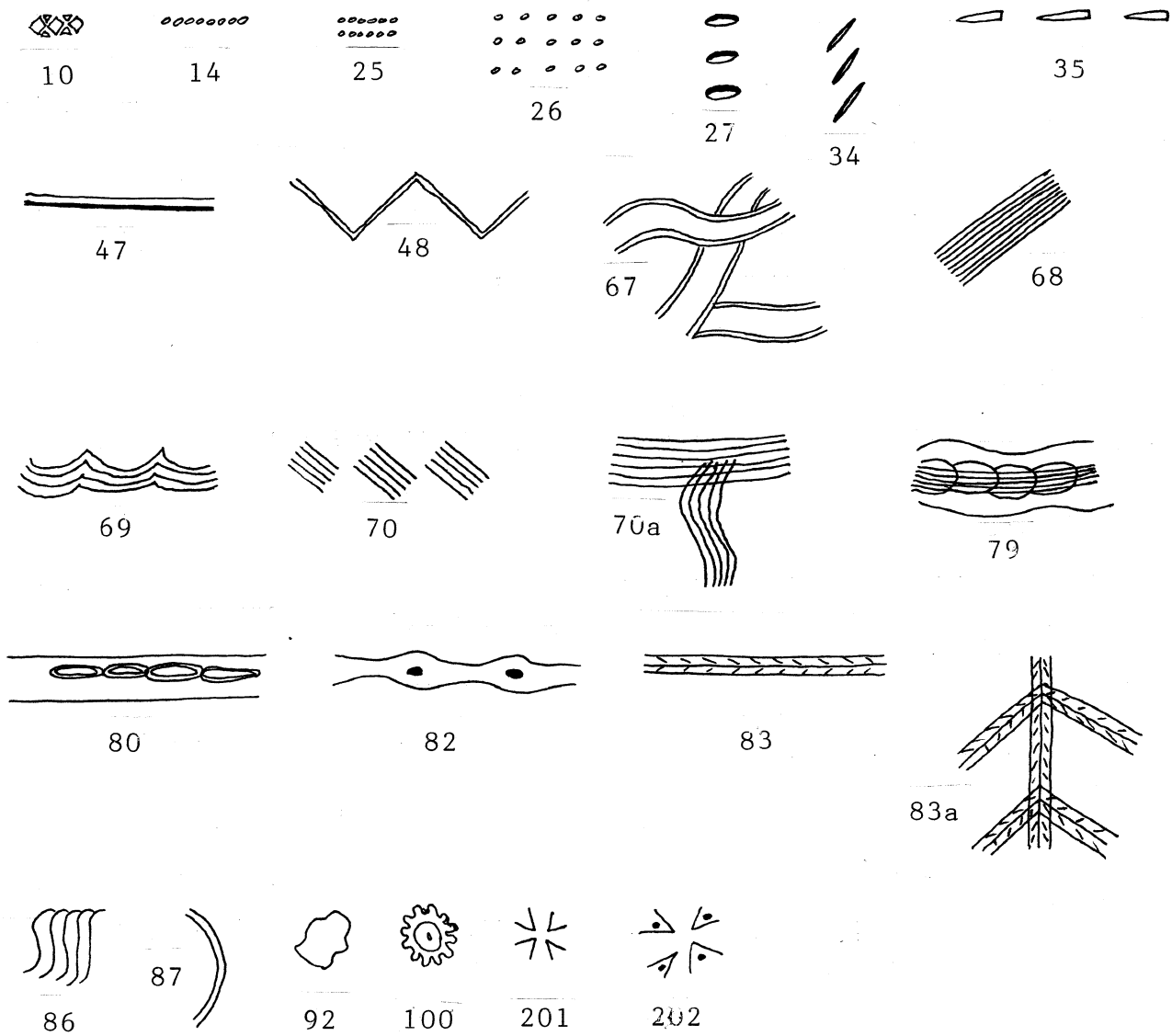

Figure 9b. Decoration types added during this analysis.

C11A - green glazed
Fine fabric with a scattering of small clear quartz granules. Occasional small red grog inclusions. Inclusions not obvious.

C11B - green glazed
Coarse fabric with many medium size quartz granules. Some small, occasional large, amorphous black grains.

M1 - coarse grey
Coarse matrix with many medium sized clear and grey quartz inclusions. Some black and red amorphous inclusions also present.

M2 - coarse grey/brown
Coarse matrix with many large grey quartz granules.

M3 - coarse grey
Medium coarse matrix with medium size brown quartz granules. Small white and black inclusions, both small and medium are present.

M4 - coarse grey
Medium coarse matrix with small to medium size quartz. Some red and yellow amorphous inclusions are present (?grog). Occasional small white inclusions.

M5
Unused

M6 - smooth brown
Very coarse crumbly matrix with large rounded inclusions of grog. Occasional large grey quartz granules.

MANSHEAD POTTERY ASSEMBLAGE SHEET

SITE FRIARY	FEATURE 15 CELLAR	GRID J-M, 5-9	DATE OF EXCAVATION
Compiled by: MG	Date 24/12/84	Sheet of	CODES K

FABRIC	FORM	EVES	WEIGHT	TYPOLOGICAL FEATURES	DRAWN?	COMMENTS	REF.
M1	BOWL	0.06	30g.	RM04/45	Y		✓
M1	BOWL	0.22	160g.	RM11/27	Y		✓
M1	BOWL	0.12	120g.	RM17/86	Y		✓
M1	BOWL	0.09	70g.	RM11/27	Y		✓
M1	BOWL	0.07	40g.	RM11/27	Y		✓
M1	JAR	0.07	5g.	RM10/04	Y		✓
M1	CP	0.14	25g.	RM04/01	Y		✓
M1	BOWL	0.06	35g.	RM02/01	Y		✓
M1	JAR	0.01	35g.	RM17/92	Y		✓
M1	CP	0.06	30g.	RM10/04	Y		✓
M1	JUG	0.22	30g.	RM04/46, DC116, B.R	Y		✓
M1	JAR	0.06	10g.	RM17/09	Y		✓
M1	BOWL	0.04	20g.	RM17/86	Y		✓
M1	BS	—	15g	DC122	N	Other random odd impressions are present.	✓
M1	CP	—	70 g	BS02	N		✓
M1	JUG	—	80g	HN06	N	Attachment = deep internal impress.	✓
M1	BOWL	0.18	140g	RM11/27	N		✓

Figure 10. Completed analysis sheet.

M7 - coarse orange
Coarse crumbly fabric with many medium sized grey quartz inclusions. Some large inclusions of grog.

M8 - coarse grey
Very coarse fabric. Few quartz inclusions. Areas of black amorphous material.

M9 - coarse grey
Coarse fabric with many grey quartz inclusions. Small amount of grog present.

M10 - coarse grey
Coarse fabric with inclusions of angular white flint. Some quartz and grog present in small quantities.

M11 - coarse black/grey
Medium coarse fabric with many small to medium quartz granules. Also present are many small inclusions of black, red and yellow grog. Fabric has a very uniform appearance.

M12 - coarse grey
Uniform medium coarse fabric with no obvious inclusions. Some dark quartz and grog appears to be present.

M13 - coarse grey
Medium coarse fabric. Quartz inclusions are small and well scattered. Small to medium size black, occasional brown, inclusions are very noticeable.

M14 - coarse orange
Medium coarse fabric. Small to medium quartz inclusions are common. Small amorphous black inclusions present. Fabric has cavities.

M15 - coarse brown
Medium coarse fabric with many medium size quartz and grog inclusions.

M16 - grey
Medium coarse fabric with many medium size quartz, chalk and grog inclusions. Uniform appearance.

M17 - coarse grey
Uniform medium coarse fabric with a few large grey quartz inclusions; a few small clear quartz inclusions. A few grog granules are present. Many elongate fractures.

M18 - coarse grey
Coarse ill-sorted fabric with some large grey quartz inclusions. A few small/medium amorphous black and red grog inclusions.

M50 - green glazed
Fine fabric with many small quartz inclusions, occasional medium sized pieces. Many small black inclusions which appear to be grog.

M51 - green glazed
Medium coarse fabric with many small to medium size grey quartz inclusions. Very few black inclusions. No grog. Cavities.

M52 - coarse orange
Coarse crumbly fabric with small to medium size quartz inclusions. Many small inclusions of grog (red and yellow). Some black inclusions which may also be grog.

M53 - smooth white
Coarse fabric with many well distributed small to large grey and brown quartz granules. Occasional chalk inclusion and small to medium dark red amorphous granules.

M54 - pale green-glazed
Coarse fabric with many clear and grey quartz inclusions. Small to medium black (grog) inclusions occur throughout.

M55 - smooth brown; glazed inside
Medium to coarse fabric with a scattering of small to medium size clear quartz. Inclusions of grog, medium to large, are black, red and yellow; fairly common.

M56 - coarse brown; yellow/brown glazed
Medium coarse fabric with a few small and large granules of grey quartz. Frequent medium size black amorphous grains.

M57 - yellow/green/brown glazed
Fine fabric with many small/medium clear and brown quartz inclusions. Many small and medium size, round and elongate, black inclusions. Inclusions very noticeable.

M60 - green glazed

Fine to medium coarse fabric with numerous small inclusions of quartz. Many well scattered small black and pink inclusions.

The majority of the medieval pottery from the Friary Field falls into four basic fabrics: C9, C11A, M1 and M2. These fabrics provide the glazed and unglazed wares used on the site during the Medieval period. C9 and C11A being glazed and M1 and M2 being unglazed. Of these four, the dominant fabrics are C9 and M1. The vessels made from each of these four fabrics can be seen in the pie charts shown in Figure 12.

The accompanying illustrations attempt to show the range of material found. Many more coarse wares are shown because these exhibit the greatest variety and, because of their more robust nature, survive in larger pieces. Many of the glazed wares survive as small sherds and small rim fragments which, although plentiful, are very similar or too small to accurately illustrate.

The kilns of the fabrics C9 and M1 can be stated with some certainty as being the Brill/Boarstall and Flitwick kilns respectively.

C9 equates with Fabric 4 reported from George St, Aylesbury (Yeomans in Allen and Dalwood, 1983). Stylistically the wares are similar, with the flagon (113) being almost identical with one shown in the above report (Fig 15 No 7). The date given for this particular vessel is late 13th century. Other comparisons with the reports by Farley (Farley, 1982) and Ivens (Ivens, 1982) show similarities with material excavated at Boarstall and Brill.

Fabric M1 almost certainly comes from the kiln at Flitwick (Mynard, Petchey and Tilson, 1983). A number of the Dunstable vessels are very similar to those illustrated from Flitwick; in particular Nos 1, 2, 3, 4, 25, 29 and 49. There are however some omissions, in particular Nos 43 and 44 (Rim 15/23), and No 48. It must be remembered that the excavation at Flitwick was not exhaustive so it is only to be expected that difference will be found.

Fabric M2 is a coarser ware than M1 and is used extensively for the production of cooking pots. The source of this ware has not yet been identified but its very sandy nature would suggest a kiln somewhere to the north or north west of Dunstable at the Greensand/Gault clay junction. Typical types are shown in Figures 17 and 18.

The source kiln of fabric C11A has not yet been identified. The fabric is less coarse than C9 by virtue of it being tempered with less quartz. The vessel types are similar to those made in C9 and it is evident that the two fabrics were in competition with evidence to suggest that C11A vessels were ultimately the more successful and therefore became the predominant glazed type. The fabric does not appear to be from the Brill/Boarstall area unless a hitherto unknown kiln site making this ware is found. A suggestion has been made by Alan Vince that this ware comes from the Hertfordshire area. Characteristics of the Hertfordshire ware are pressed bosses (Vince, 1985. Fig 29 No 3) and 'ears' at the top of the handle. Neither of these occur in C11A. The bosses shown in No. 143 are in Fabric 50.

The face masks shown in Nos 147 - 149 are similar to those illustrated from a number of sites and are generally ascribed to the 14th century.

Other fabrics occur in much smaller quantities and must be derived from purchases made in nearby markets. Some vessels such as the imported Spanish lustre ware (No 146) may have been gifts.

In the pottery catalogue shown here we seem to have examples for the whole of the period from 1259 to 1535. Many of the vessels are unprovenanced but their inclusion is essential if we are to get a picture of the pottery usage on the site during the life of the Friary.

Pottery catalogue

The illustrations are shown on figures 13-20

Fabric M1

1. Jar. Rim 1/13. Feature 12.
2. Bowl. Rim 1/28. Feature 15.
3. Bowl. Rim 2/1. Feature 15.
4. Bowl. Rim 2/1. Feature 6.
5. Bowl. Rim 2/16. Feature 16.
6. Drip pan. Rim 2/16. Feature 6.
7. Bowl. Rim 2/27. Feature 7.
8. Bowl. Rim 2/28. Feature 7.
9. Jar. Rim 4/14. Feature 6.
10. Bowl. Rim 4/45. Feature 15.
11. Bowl. Rim 7/9. Feature 2.
12. Flagon. Rim 8/5. Feature 2.
13. Jar. Rim 9/24. Feature 6.
14. Jar. Rim 9/35. Feature 6.
15. Jar. Rim 10/4. Feature 15.
16. Jar. Rim 10/4. Feature 15.
17. Bowl. Rim 10/14. Feature 6.
18. Jar. Rim 10/23. Feature 6.
19. Bowl. Rim 11/1. Feature 2.
20. Bowl. Rim 11/1. Feature 2.
21. Bowl. Rim 11/1. Feature 7.
22. Bowl. Rim 11/1. Feature 2.
23. Jar. Rim 11/4. Feature 1.
24. Bowl. Rim 11/5. Feature 7.
25. Bowl. Rim 11/5. Feature 9.
26. Bowl. Rim 11/9. Feature 7.
27. Bowl. Rim 11/12. Feature 6.
28. Bowl. Rim 11/25. Feature 1.
29. Bowl. Rim 11/25. Feature 6.
30. Bowl. Rim 11/26. Feature 14.
31. Bowl. Rim 11/27. Feature 13.
32. Bowl. Rim 14/1. Feature 6.
33. Bowl. Rim 14/4. feature 7.
34. Bowl. Rim 14/7. Feature 6.
35. Bowl. Rim 14/8. Feature 6.
36. Bowl. Rim 14/9. Feature 2.
37. Bowl. Rim 14/10. Feature 6.
38. Bowl. Rim 14/11. Feature 2.

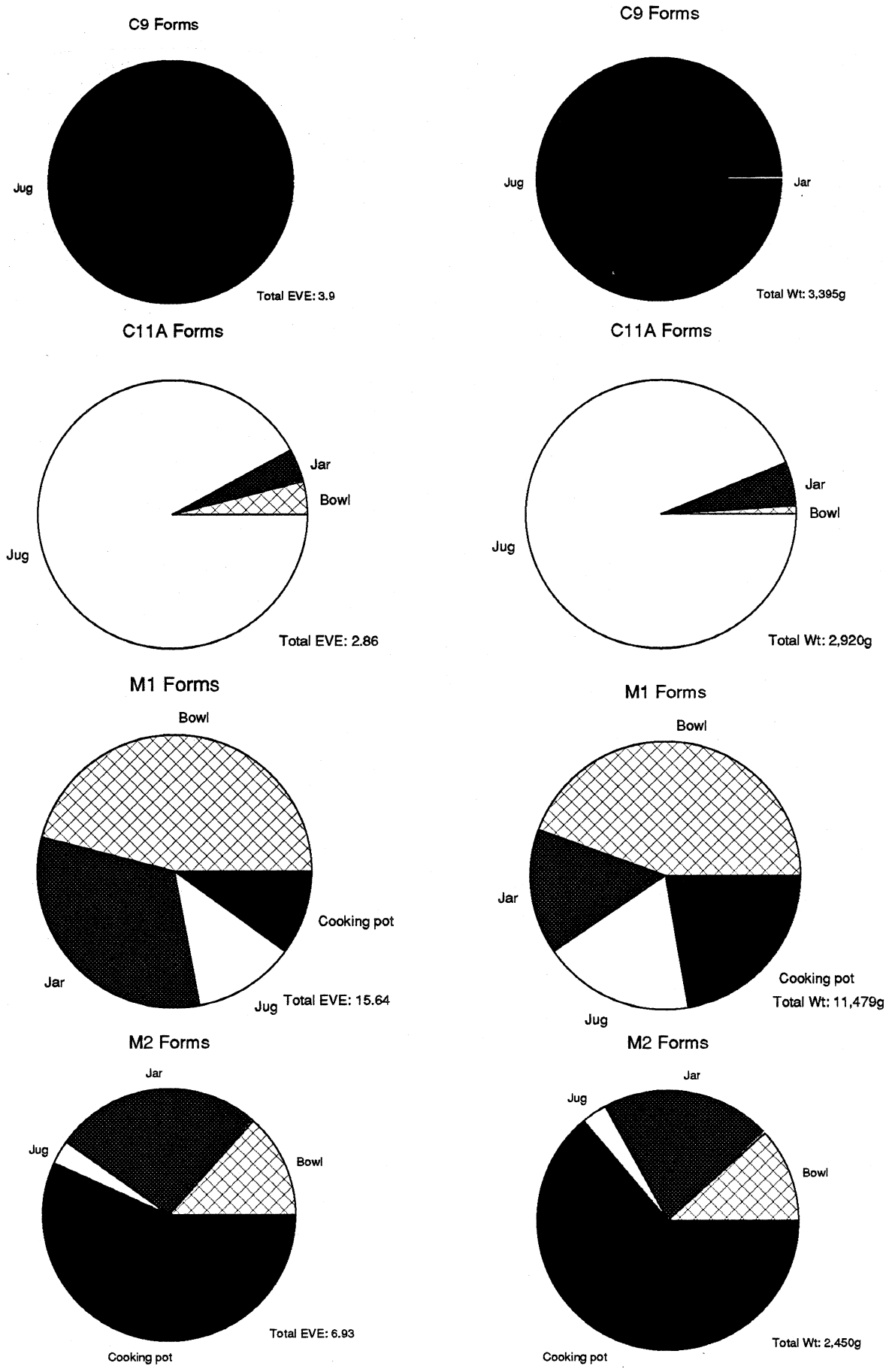

Figure 11. Pie charts of C9, C11A, M1 & M2.

Figure 12a. Rim types.

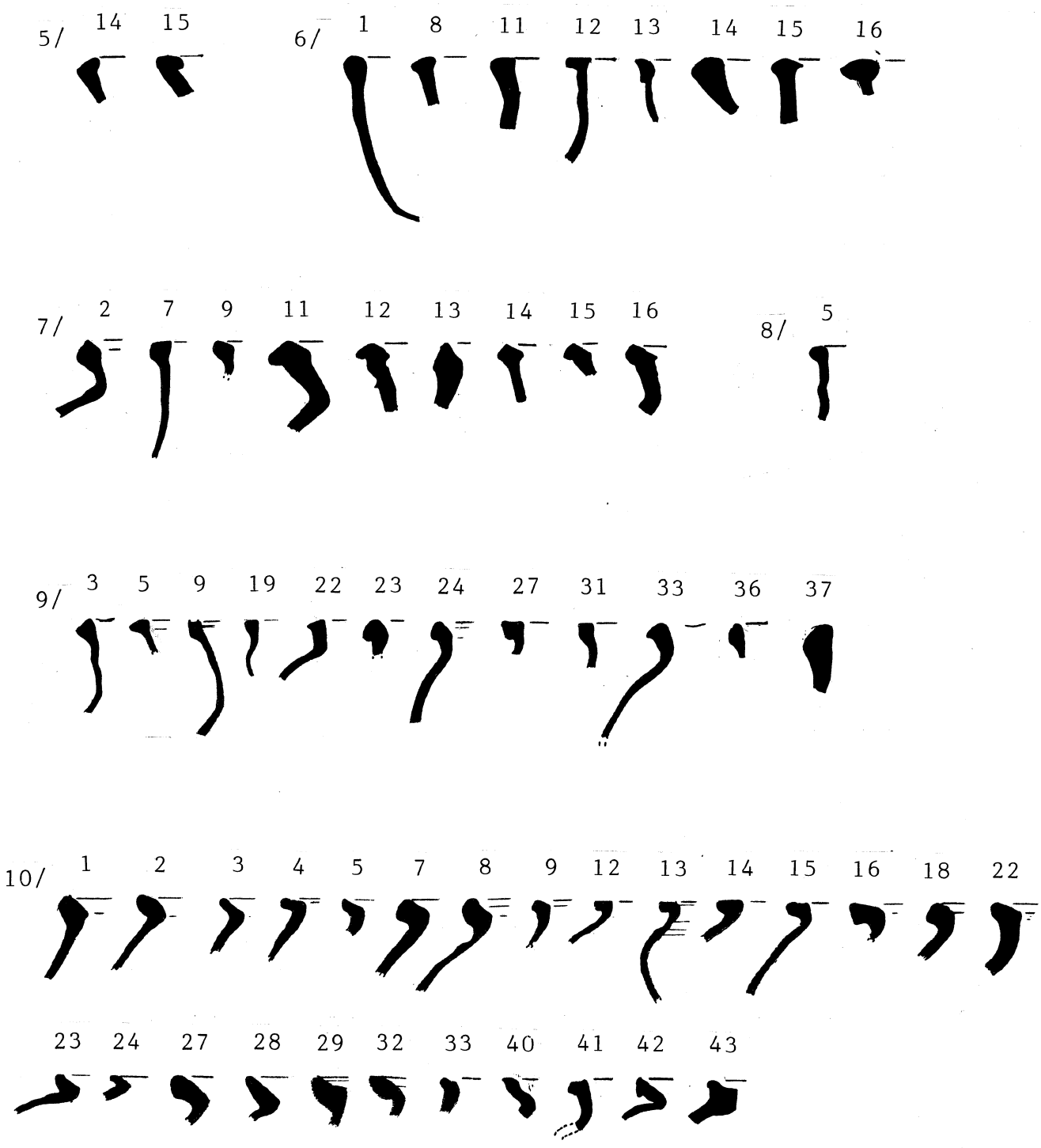

Figure 12b. Rim types.

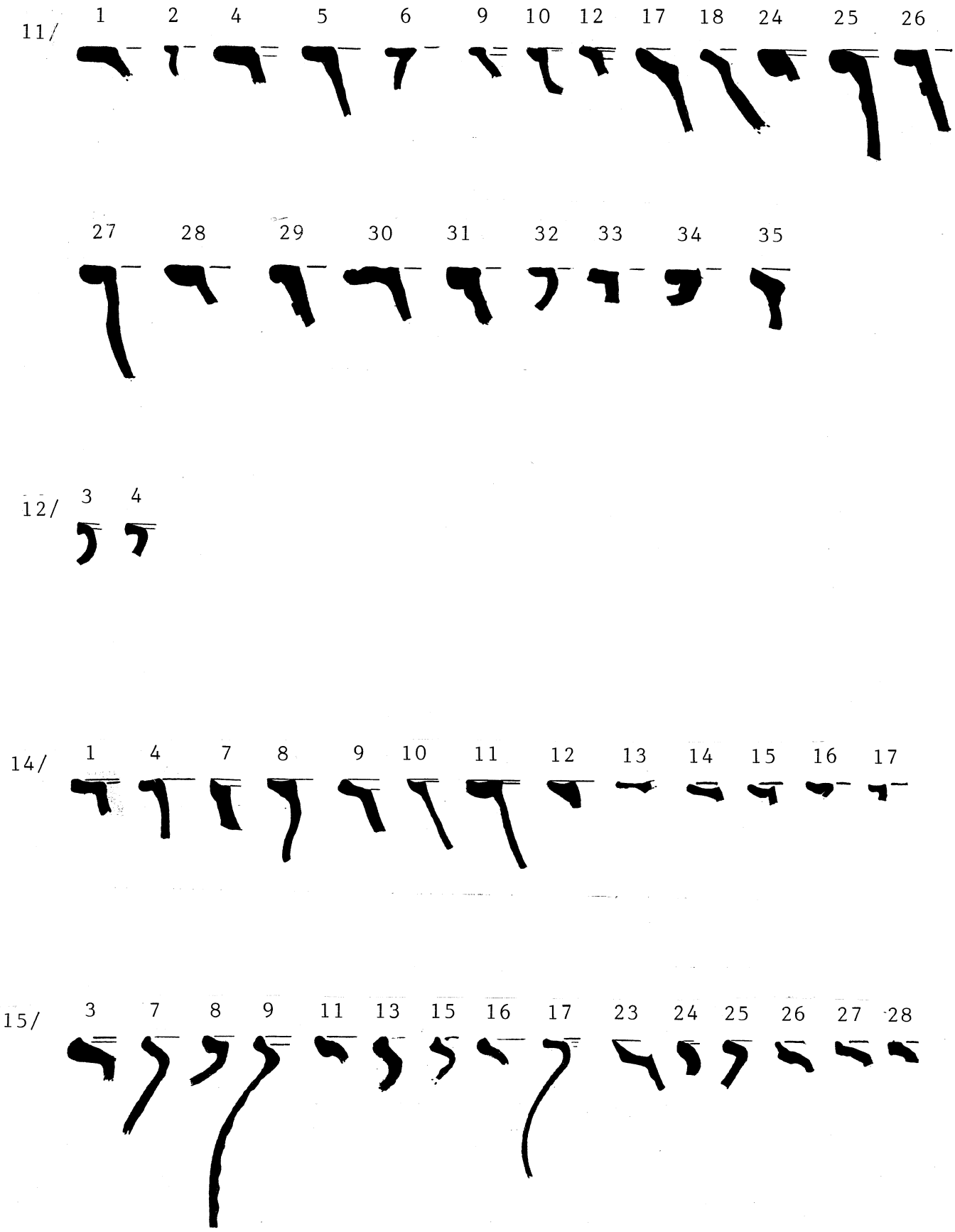

Figure 12c. Rim types.

Figure 12d. Rim types.

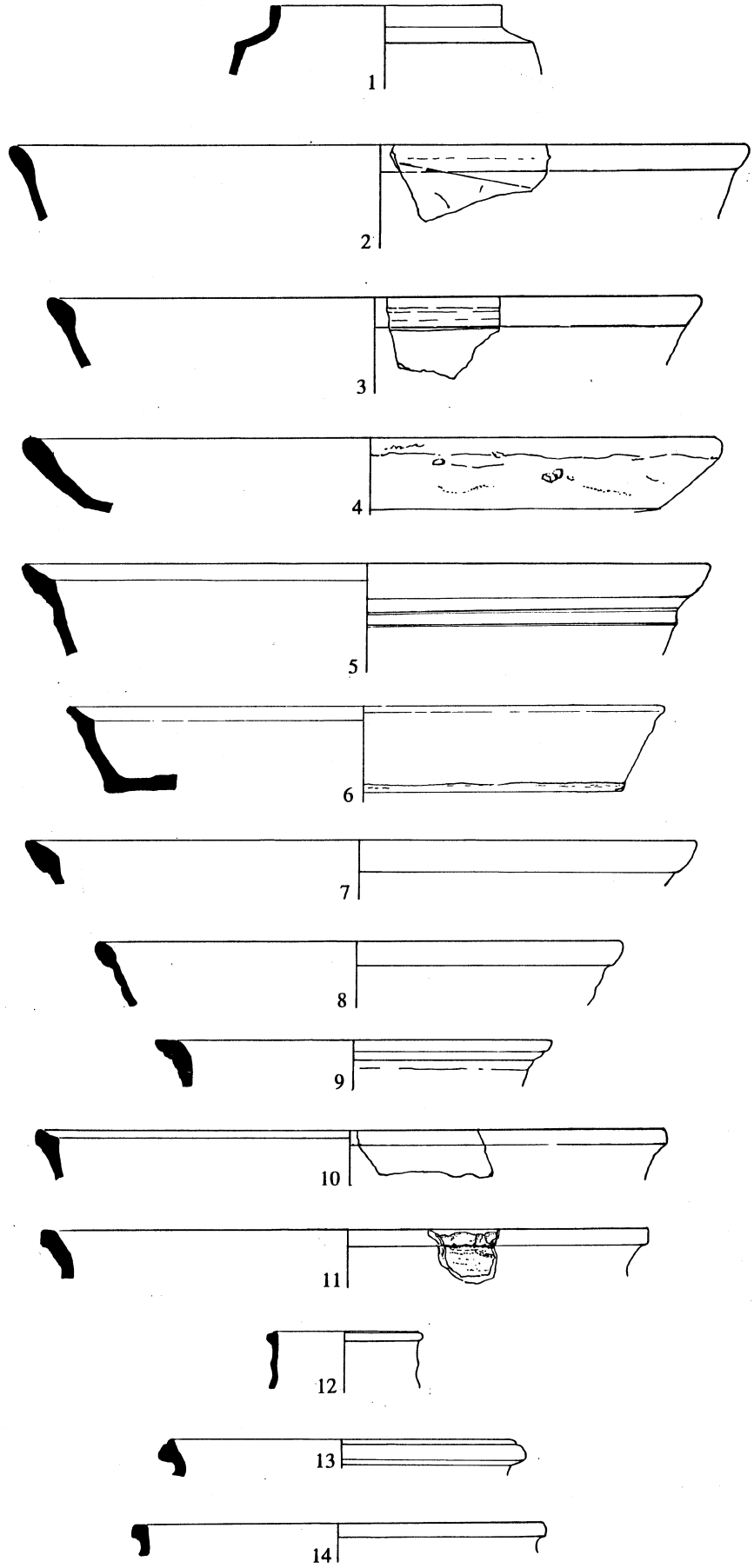

Figure 13. M1 pottery.

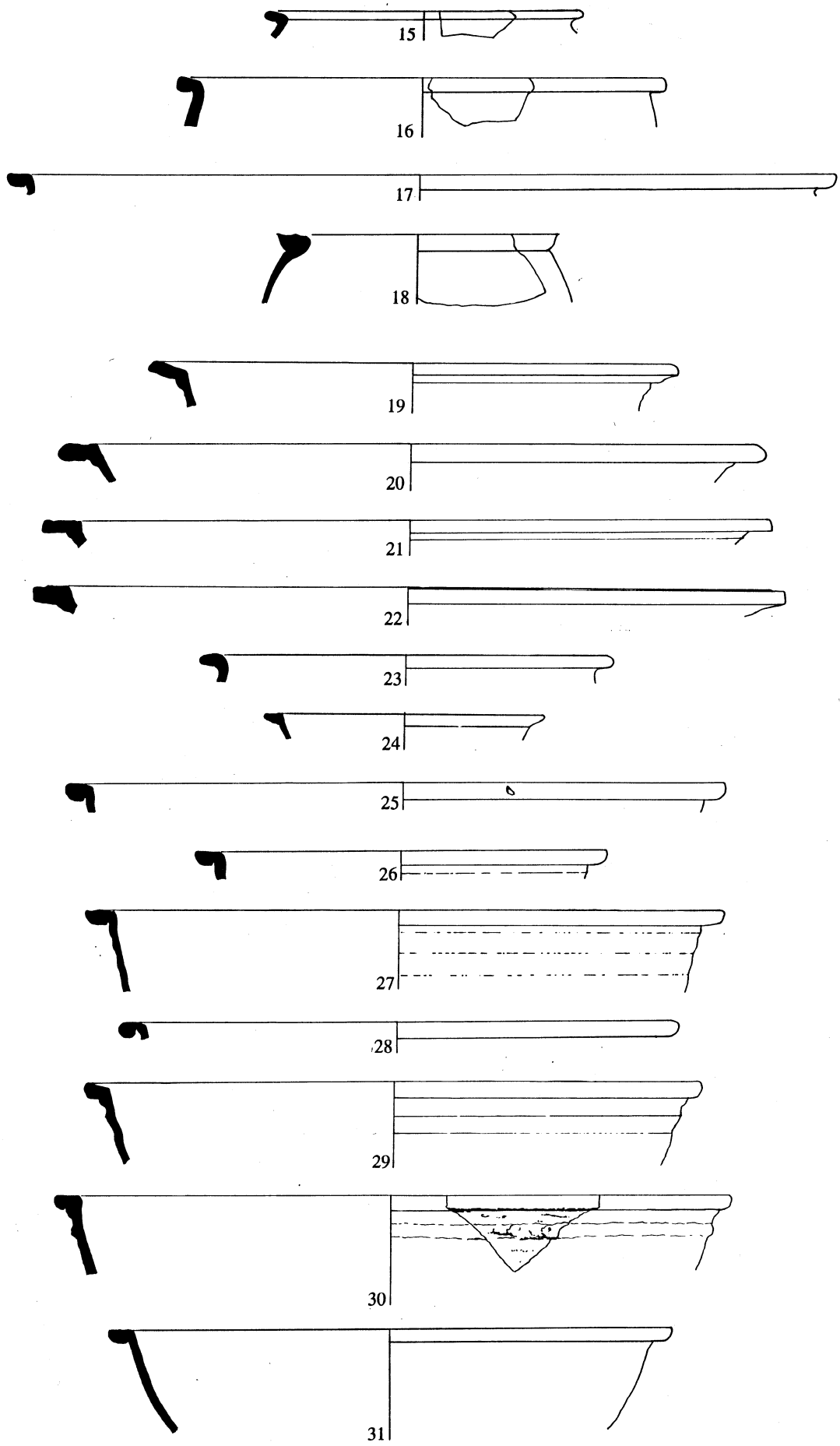

Figure 14. M1 pottery.

39. Bowl. Rim 14/12. Feature 6.
40. Bowl. Rim 14/14. Feature 1.
41. Bowl. Rim 15/16. Feature 2.
42. Bowl. Rim 15/16. Feature 8.
43. Bowl. Rim 15/23. Feature 2.
44. Bowl. Rim 15/23. Feature 7.
45. Jar. Rim 15/25. Feature 10.
46. Jar. Rim 17/7. Feature 14.
47. Jar. Rim 17/9. Feature 14.
48. Bowl. Rim 17/19. Feature 15.
49. Jar. Rim 17/36. Feature 18.
50. Jar. Rim 17/42. Feature 7.
51. Jar. rim 17/42. Feature 2.
52. Jar. Rim 17/53. Feature ?
53. Bowl. Rim 17/77. Feature 15.
54. Jar. Rim 17/92. Feature 15.
55. Jar. Rim 18/5. Feature 6.
56. Jar. Rim 19/16. Feature 7.
57. Bowl. Rim 20/7. Feature 7.
58. Bowl. Rim 28/1. Feature 6.

Fabric C5

59. Bowl. Rim 2/25. Feature 6.
60. Jar. Rim 10/43. Feature 5.
61. Bowl. Rim 11/1. Feature 6.

Fabric M2

62. Flagon. Rim 1/44. Feature 2.
63. Bowl. Rim 2/8. Feature 2.
64. Bowl. Rim 2/26. Feature 10.
65. Bowl. Rim 2/29. Feature 15.
66. Bowl. Rim 6/8. Feature 6.
67. Jug. Rim 6/11. Feature 9.
68. Jar. Rim 7/11. Feature 2.
69. Jar. Rim 7/13. Feature 6.
70. Jar. Rim 10/1. Feature 6.
71. Cooking pot. Rim 10/12. Feature 2.
72. Cooking pot. Rim 10/13. Feature 6.
73. Cooking pot. Rim 10/16. Feature 6.
74. Cooking pot. Rim 10/18. Feature 2.
75. Cooking pot. Rim 10/24. Feature 7.
76. Flagon. Rim 11/2. Feature 6.
77. Bowl. Feature 2.
78. Bowl. Rim 11/24. Feature 8.
79. Jar. Rim 12/3. Feature 6.
80. Cooking pot. Rim 12/4. Feature 8.
81. Cooking pot. Rim 12/4. Feature 2.
82. Cooking pot. Rim 12/4. Feature 6.
83. Bowl? Rim 14/12. Feature 7.
84. Cooking pot. Rim 15/3. Feature 6.
85. Cooking pot. Rim 15/9. Feature 6.
86. Jar. Rim 15/15. Feature 2.
87. Cooking pot. Rim 15/17. Feature 10.
88. Cooking pot. Rim 15/17. Feature 10.
89. Jar. Rim 15/24. Feature 8.
90. Jar. Rim 16. Feature 6.
91. Jar. Rim 17/3. Feature 6.
92. Bowl. Rim 17/21. Feature 15.
93. Cooking pot. Rim 17/39. Feature 6.
94. Cooking pot. Rim 17/39. Feature 6.
95. Jar. Rim 17/40. Feature 6.
96. Jar. Rim 17/49. Feature 6.
97. Jar. Rim 17/53. Feature 14.
98. Bowl. Rim 17/78. Feature 6.
99. Jar. Rim 20/6. Feature 6.

Various fabrics.

100. Bowl. Fabric M3. Feature 6 & 7.
101. Handle. Fabric M1. Feature 6.
102. Handle. Fabric M1. Feature 2.
103. Drip pan handle. Fabric M1. Feature 6.
104. Handle. Fabric M1. Feature ?
105. Handle. Fabric C5. Feature 1.
106. Handle. Fabric C5. Feature 1.
107. Handle. Fabric M2. Feature 6.
108. Bowl. Fabric M2. Feature 6.
109. Base. Fabric M1. Base 8. Feature 7.
110. Base. Fabric M1. Feature 15.
111. Bung hole. Fabric M1. Feature 6.
112. Bung hole. Fabric E8. Feature 6.

Fabric C9

113. Jug. Rim 4/50 Feature 25.
114. Jug. Rim 4/50. Feature 1.
115. Jug. Rim 4/50. Feature 6.
116. Jug. Rim 4/51. Feature 6.
117. Jug. Rim 4/51. Feature 2.
118. Jug. Rim 4/51. Feature 6.
119. Bowl. Feature 6.
120. Bowl. Feature 7.
121. Bowl. Feature 6.
122. Bowl. Feature 7.
123. Handle. Feature 6.
124. Handle. Feature 7.
125. Handle. Feature 2.
126. Base. Feature 6.
127. Base. Feature 6.
128. Base. Feature 6.
129. Base. Feature 6.
130. Base. Feature 2.
131. Handle. Feature 6.
132. Jug. Rim 4/50. Feature 15.

Fabric C11A

133. Jug. Rim 9/5. Feature 2.
134. Bowl. Rim 2/3. Feature 2.
135. Base. Feature 6.
136. Handle. Feature 2.

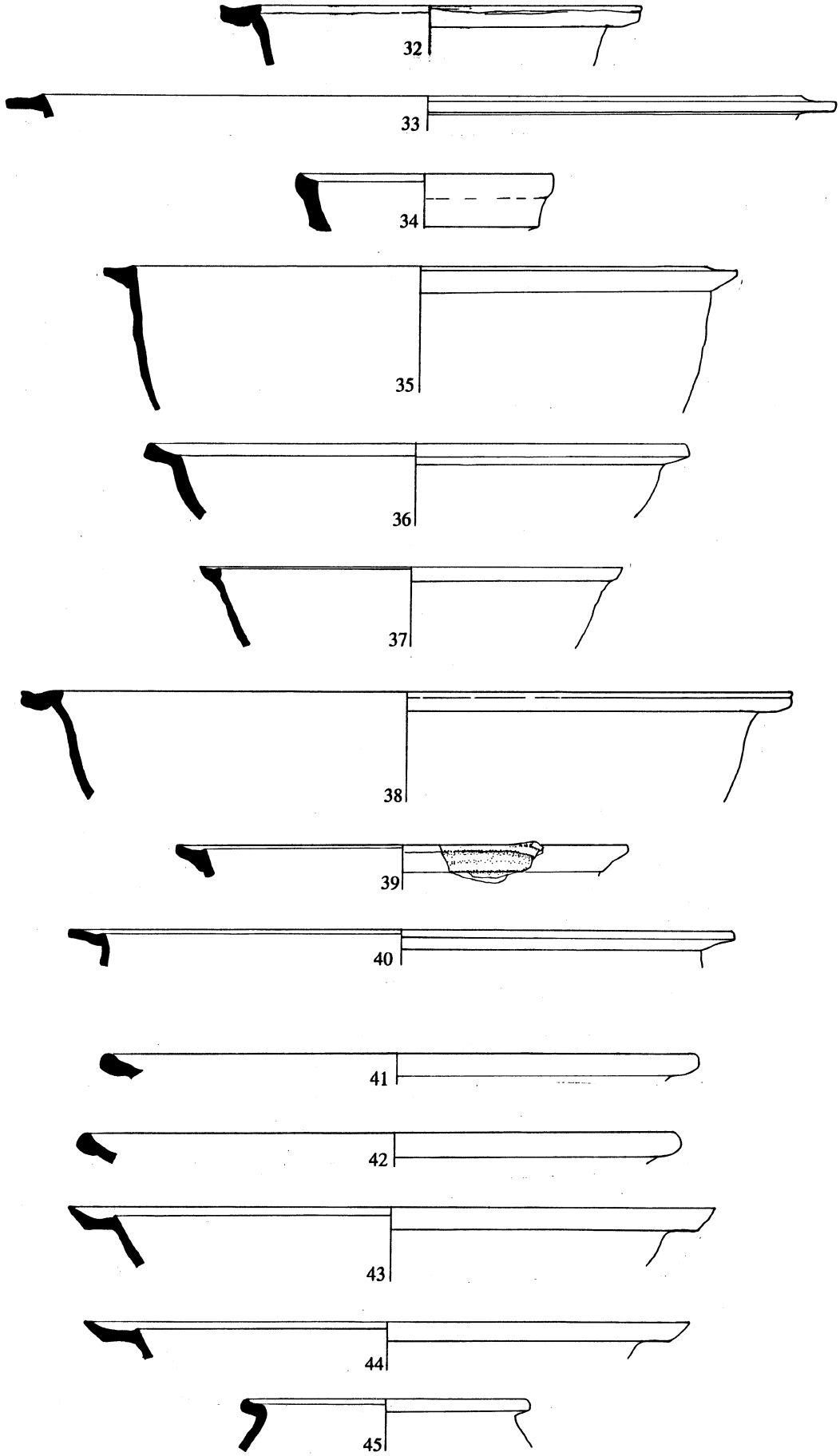

Figure 15. M1 pottery.

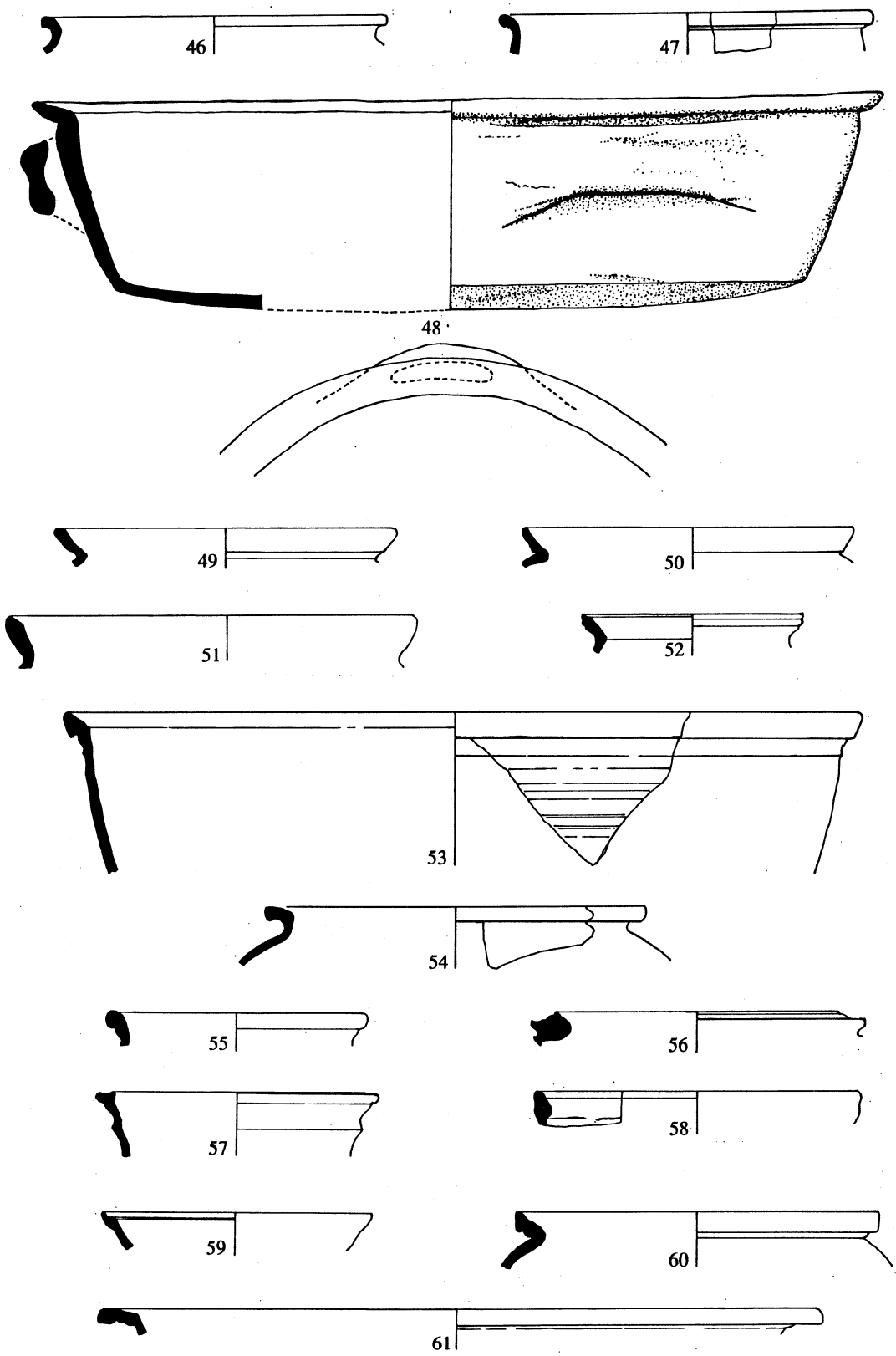

Figure 16. M1 and C5 pottery.

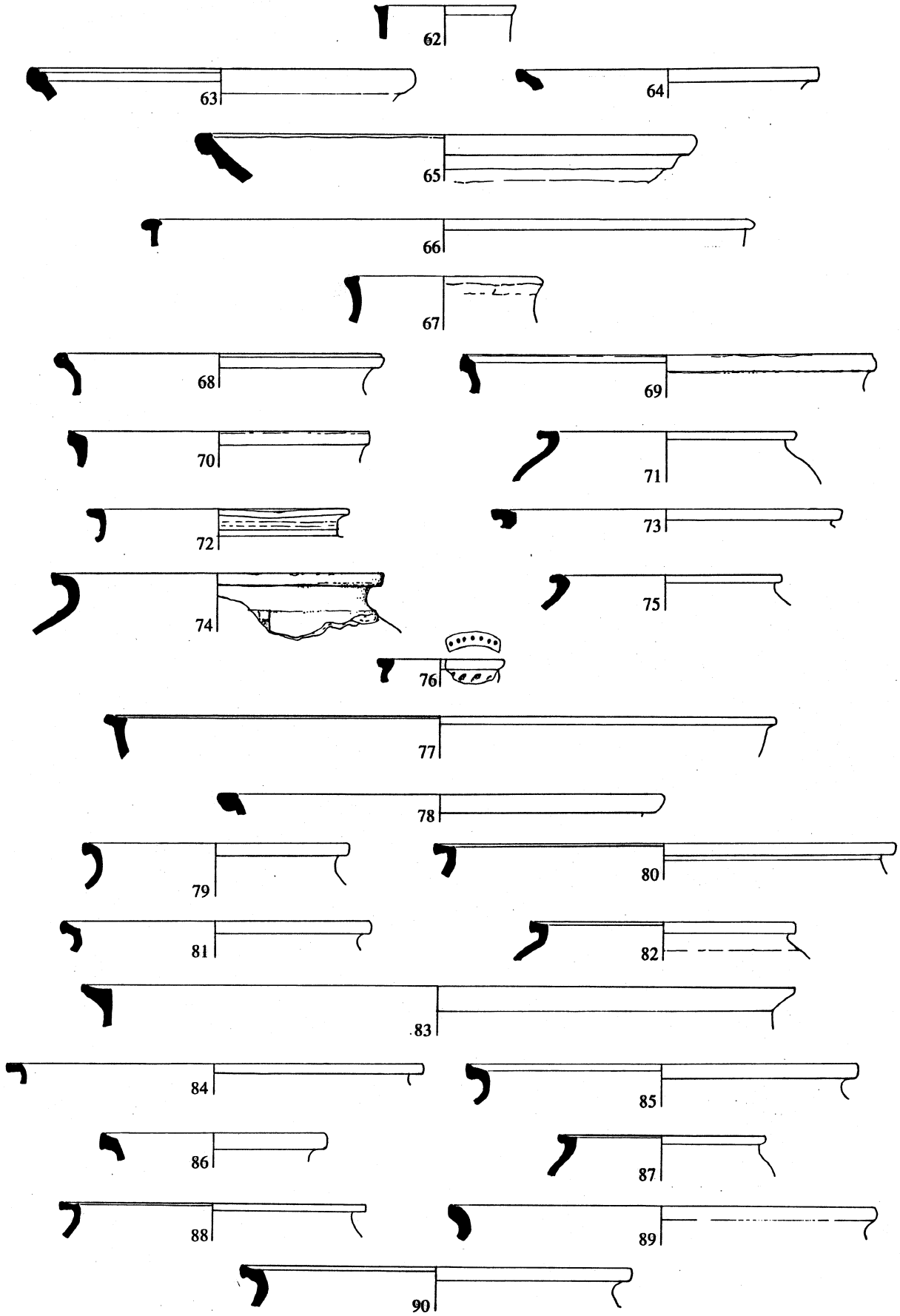

Figure 17. M2 pottery.

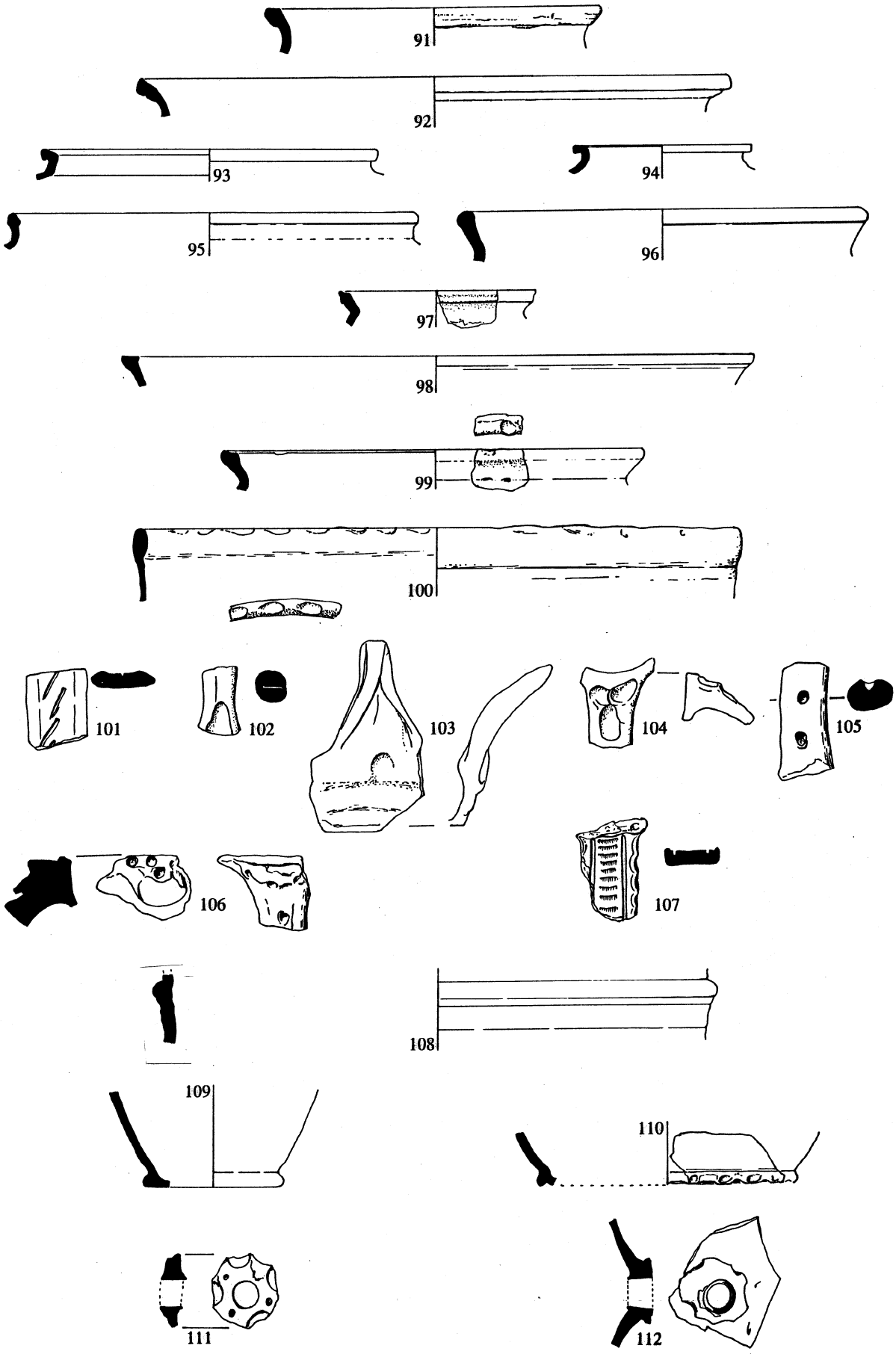

Figure 18. Various fabrics.

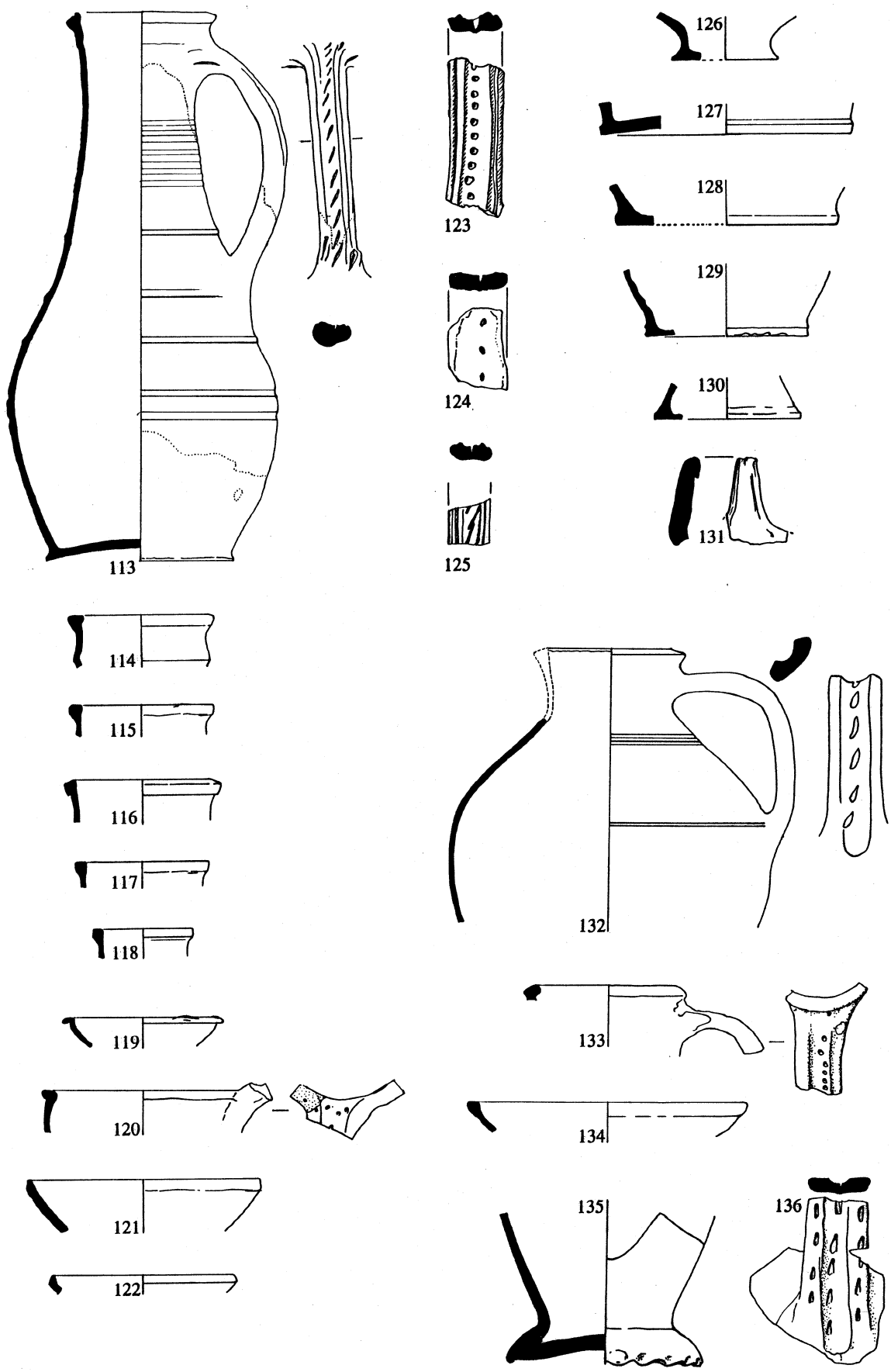

Figure 19. C9 and C11A pottery.

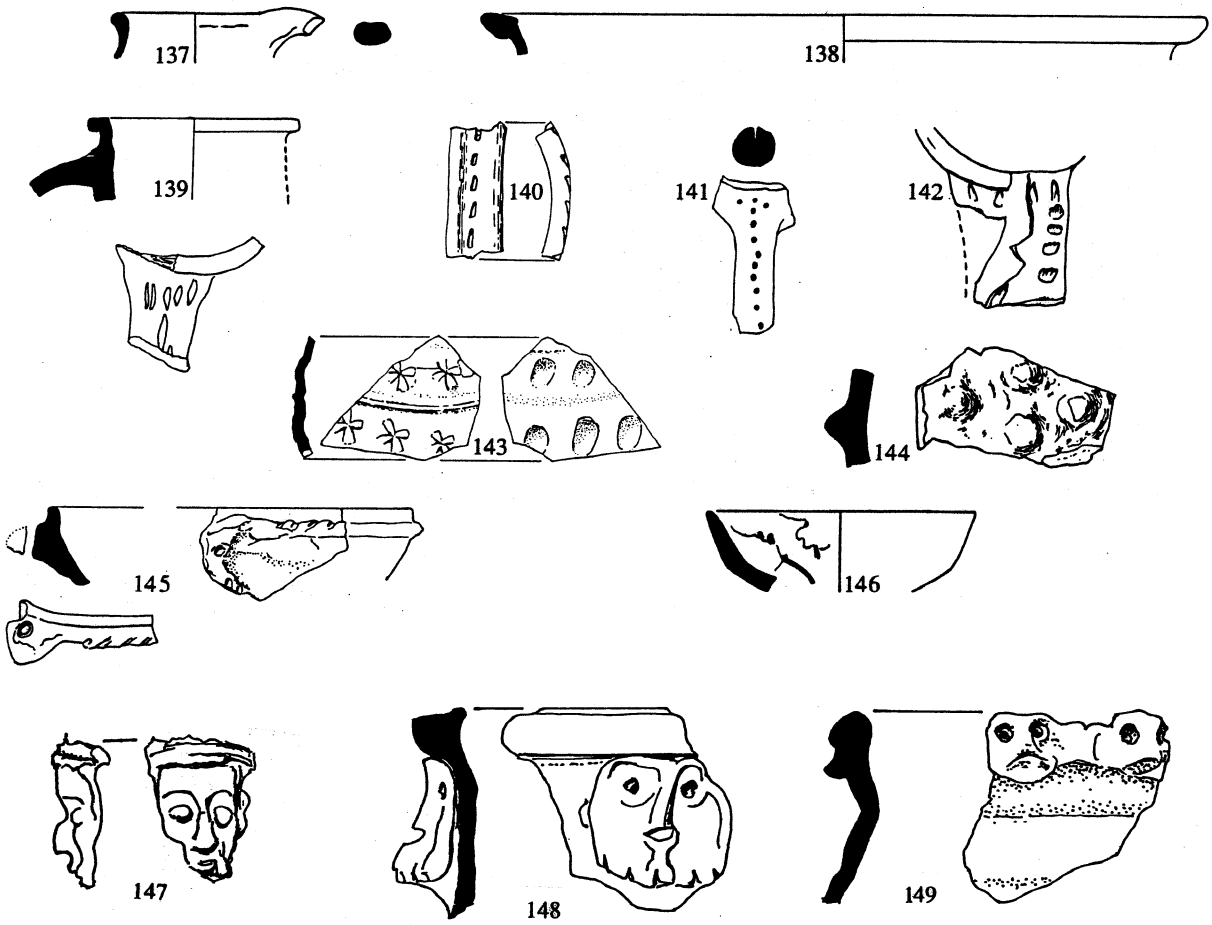

Figure 20. Various fabrics.

Various fabrics.

137. Jug. Rim 17/1. Fabric C9. Feature 7.
138. Bowl. Rim 2/27. Fabric C24. Feature 2.
139. Jug. Fabric C11A. Feature 6.
140. Handle. Fabric C11A. Feature 15.
141. Handle. Fabric C9. Feature 6.
142. Handle. Fabric C11A. Feature 15.
143. Fabric M50. Feature 15.
144. Bosses. Feature 15.
145. Bowl. Rim 23/4. Fabric C25. Feature 6.
146. Cup. Spanish lustre ware. Feature 15.
147. Face mask. Fabric C9. Feature 6
148. Face mask. Fabric C9. Feature 6
149. Face mask. Fabric C11B Feature 6

5. ANALYSIS BY FEATURE

Purpose

As mentioned in the Introduction, this is a pottery report only and therefore no definitive feature analyses are possible. However, it is worthwhile looking at a breakdown of the main fabric types and vessel types for features where significant volumes were found to see whether this gives us any more information. Additional findings about the pottery or the date and usage of features might be forthcoming. Figures 21-44 are pie charts for features 1, 2, 7, 9, 15, 25, 33 and 28/29/30/501-788 collectively. These are features where more than 500 grammes of pottery have been found. The charts show the proportions of the four fabric types which occur in any quantity (C9, C11A, M1, M2) and the five preponderant vessel types (bowls, cooking pots, jars, jugs and pitchers).

Timber building (1)

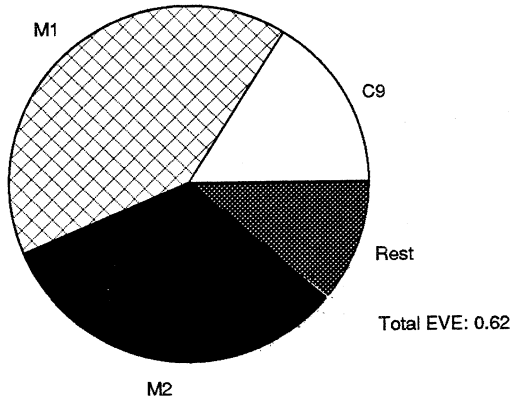

Fig 21

Timber Building (1)

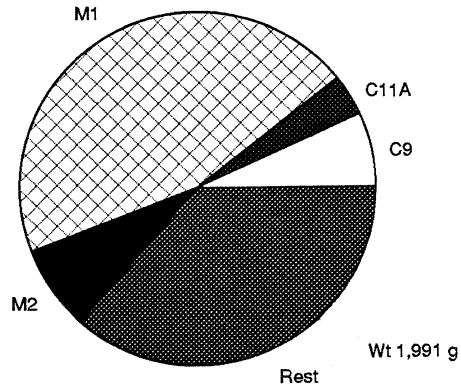

Fig 22

Kitchen (2)

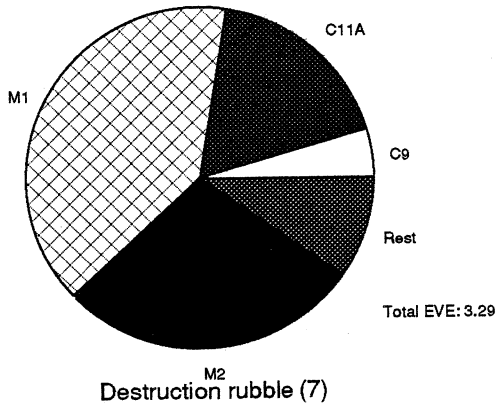

Fig 23

Kitchen (2)

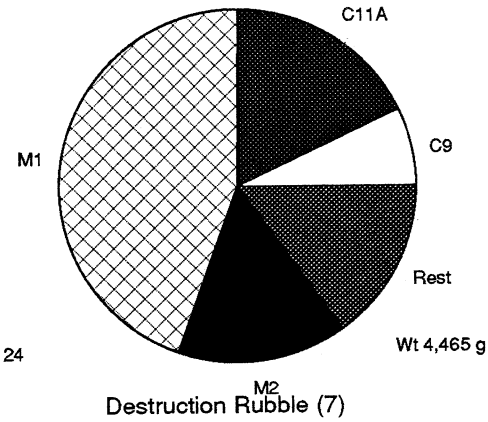

Fig 24

Destruction rubble (7)

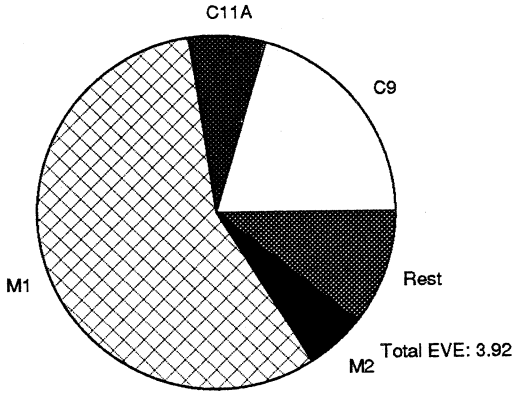

Fig 25

Destruction Rubble (7)

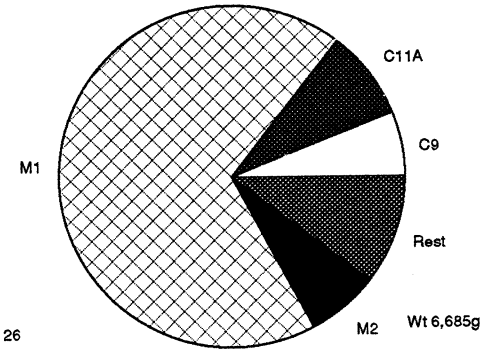

Fig 26

Cellar (9)

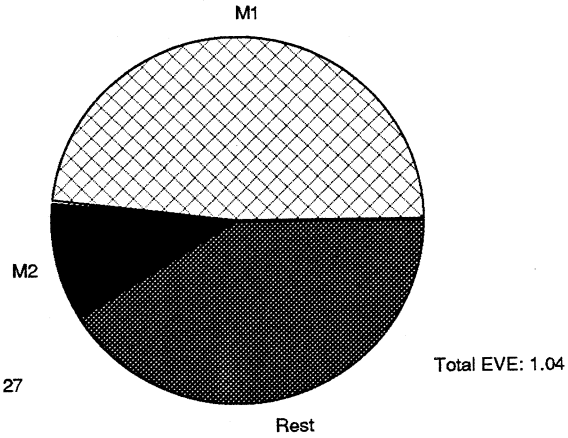

Fig 27

Cellar (9)

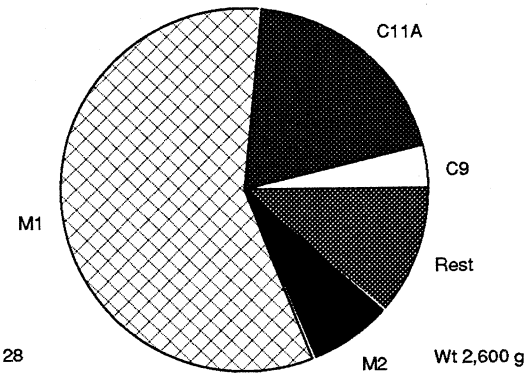

Fig 28

Cellar (15)

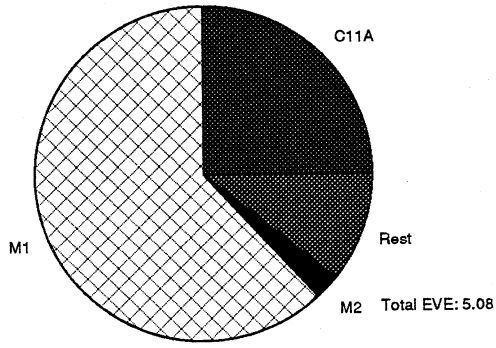

Fig 29

Cellar (15)

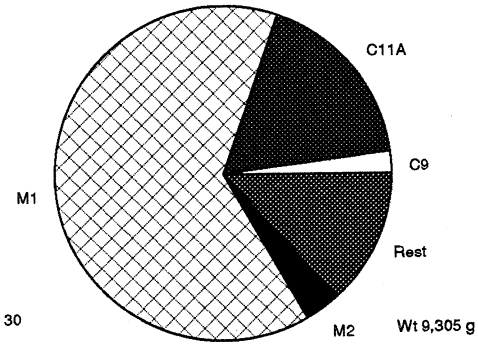

Fig 30

Toilets (25)

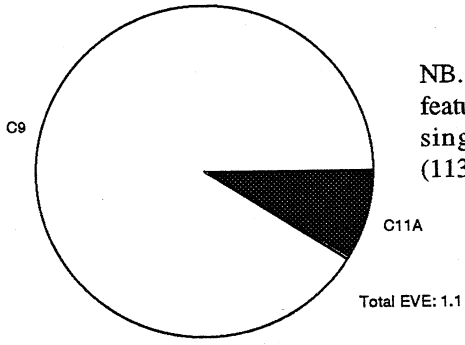

Fig 31

NB. All C9 pottery in feature 25 was from a single complete jug (113 in catalogue).

Toilets (25)

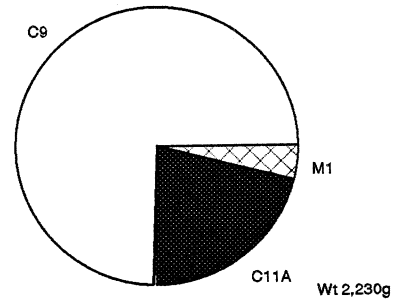

Fig 32

Buttress Trench (33)

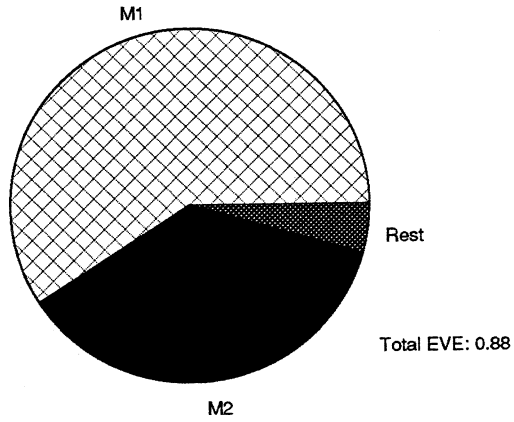

Fig 23

Buttress trench (33)

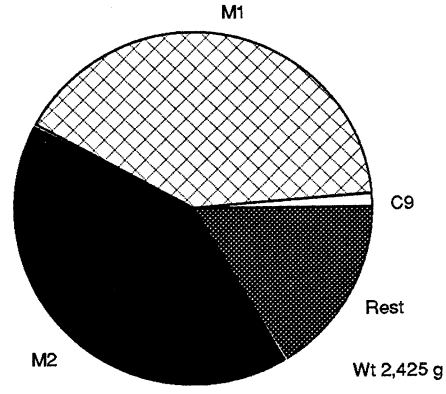

Fig 34

Crosses & Wall Trench
(features 28, 29, 30 and 501 -788)

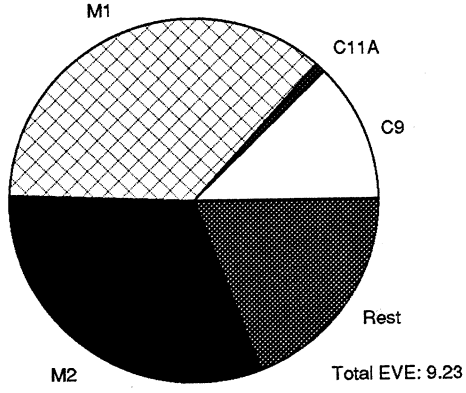

Fig 35

Crosses and Wall Trenches
(features 28, 29, 30 and 501 - 788)

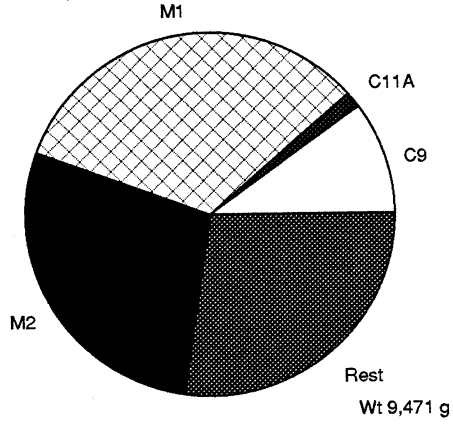

Fig 36

Timber building

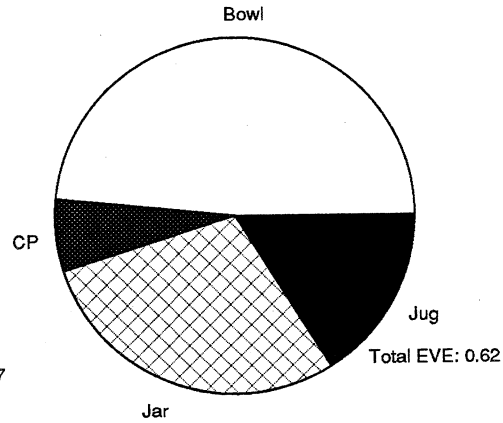

Fig 37

Kitchen (2)

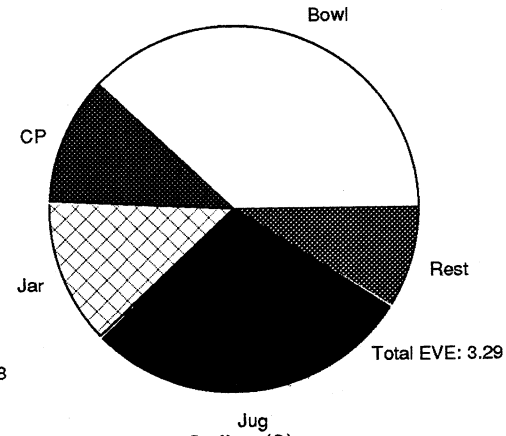

Fig 38

Destruction rubble

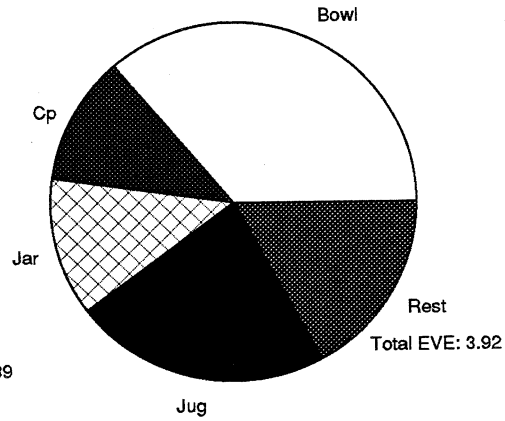

Fig 39

Cellar (9)

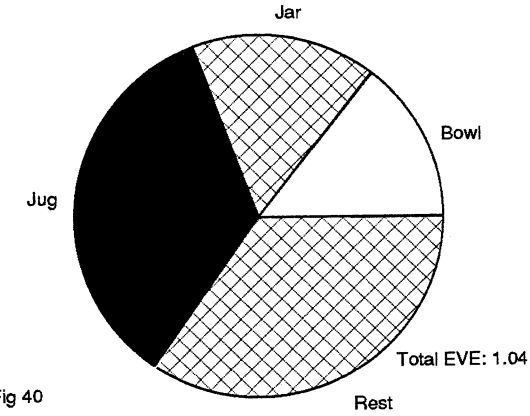

Fig 40

Cellar (15)

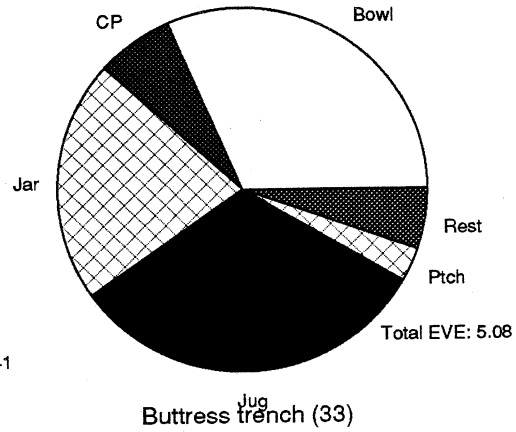

Fig 41

Toilets (25)

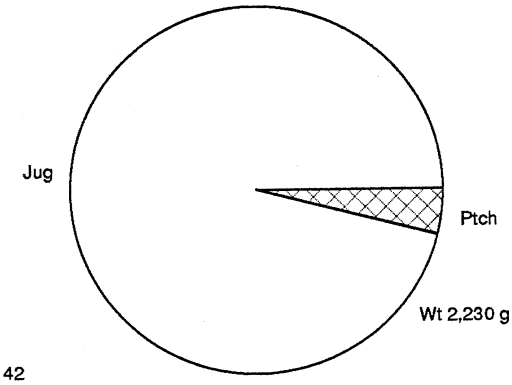

Fig 42

Buttress trench (33)

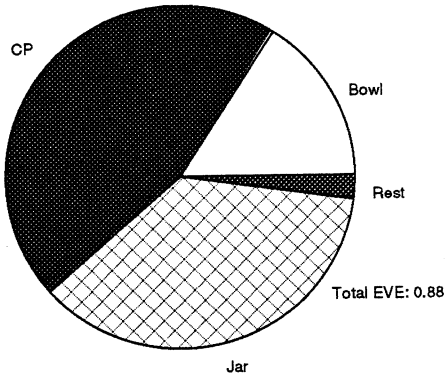

Fig 43

Crosses & Wall Trenches
(Features 28, 29, 30 and 501 - 788)

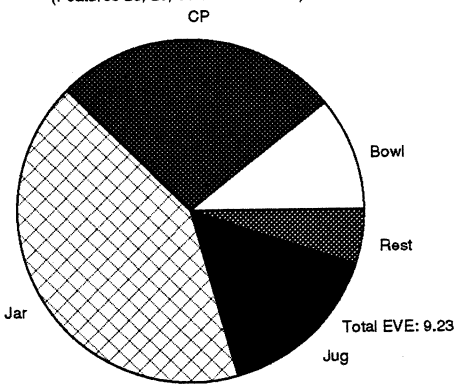

Fig 44

The Friary Kitchens (feature 2)

A little under half of all the material found here consists of fabric M1. This is a hard grey ware of the fifteenth century, identified in section 4 above as a product of the Flitwick Church End kiln. A smaller proportion of fabric M2 is present. This is the similar but coarser and less hard ware which seems to be earlier than M1 and was probably in use during the first 150 years or so of the Friary's existence. The high percentage of cooking pots which occurs in M2 is a pointer to its earlier date as metal became a much more common material for cooking vessels from the fifteenth century. Glazed wares form a low proportion of the Kitchen material, with C9 (Brill/Boarstall) and C11A fabrics occupying date bands roughly parallel to M2 and M1 respectively. Very large bowls in M1 and jugs in C11A are by far the most common vessel forms in use in the Friary Kitchens.

Timber Building and Cellars (features 1, 9, 15)

These features show a sufficiently close similarity to the Kitchens in the material found to conclude that they are of similar date. The prevalence of fabric M1 certainly suggests usage through the fifteenth century. The proximity of the feature 15, cellar, to the Kitchens and the considerable amount of pottery found in it lead one to the likelihood of a connected use, perhaps food storage. Whether the "Timber Building" and the feature 9, cellar, were part of the Friary or were civil dwellings fronting the Watling Street is impossible to say from the pottery evidence.

Crosses and Wall Trenches (features 28, 29, 30, 501 - 788)

The most enigmatic of the features discovered are the cross-shaped pits. Examination of the pie charts reveals some significant differences with the features described above are obvious. Fabric M2 is much more in evidence at around the same level as M1. Fabric C9 is present in greater quantities than C11A. Regarding vessel forms, it is cooking pots and jars which dominate the statistics rather than bowls and jugs. As the evidence is that C9 and M2 are early and there is a greater presence of these fabrics here than in the Friary structures, does this mean that the cross features were dug during the early part of the Friary's life? Assuming the crosses were indeed a creation of the Friary, quite possibly the gardens, it would seem surprising that such a considerable horticultural undertaking took place so early.

An alternative interpretation of the fabric statistics is possible. The soil fill for the crosses may have been stripped from surrounding fields. Sherds found in the crosses were noticeably smaller than from other features as would be consistent with pottery which had been spread over fields during manuring and then turned repeatedly. If this were the case, one would expect that much of the pottery concerned would be considerably older than the features in which the soil was redeposited, just as soil collected today would contain as much Victorian as modern pottery. Fabric M1 is present in the crosses even though in smaller quantities than other features and the Flitwick kiln producing it is thought to have operated around the period 1375 to 1500. This tells us the earliest possible date for the crosses and that their probable construction took place in the fifteenth century. However, given the argument advanced above for early pottery in soil redepositions, it is entirely possible for construction to have occurred at any point up to the dissolution in the 1530s.

Buttress Trench (feature 33)

As might be expected from the ground plan, the Buttress Trench is more closely related to the crosses, in terms of the pottery found, than to the other features and can be ascribed a similar, fifteenth century date. The soil filling the trench was probably imported in the same way as that for the crosses and the high proportion of M2 cooking pots is particularly interesting. However, the relatively small amount of material unearthed means that the statistical significance should not be over stated.

6. CONCLUSIONS

Two different profiles can be discerned from the feature statistics. First, there is the pattern of continuous use from roughly 1300 to 1500 with early M2 and C9 fabrics present in smaller quantities than later M1 and C11A fabrics. The Friary Kitchens, Timber Building and cellars all fall within this profile. The picture is totally unsurprising given the known dates of the Friary 1259 - 1535. A second profile, with greater quantities of earlier M2 and C9 but still significant amounts of M1 and C11A, poses more difficult questions. The crosses and Buttress Trench have this profile and if we accept the probability that they were planned and executed at a single point in time, that event seems likely to have occurred between 1400 and 1535 i.e. from the earliest date when Ml would have become widespread to the end of the Friary. Thus, the profile with the most early material

provides evidence for a date quite late in the Friary's life.

Perhaps the most interesting conclusions concern the Flitwick M1 kiln and its place in the local pottery supply industry of the fifteenth century. This fabric type has also been found in reasonable quantities in Bedford making Flitwick a major production site for the county and perhaps some distance beyond. A number of questions are raised by the trade between Flitwick and the Dunstable Dominican Friary. If the Friary was a major customer, did it have a special relationship with the producer with an influence on what was produced and perhaps direct deliveries or did the friars simply purchase from the market along with the rest of the populace? If a special relationship did exist, would this have also been the case with the Dunstable Augustinian Priory and other religious houses of the area such as Grove Priory near Leighton Buzzard? Perhaps evidence of this will emerge in the future. The sophistication of medieval potters inD Allen & C H Dalwood. salesmanship and marketing techniques and their competitive performance are areas rarely explored in archaeological reports but may be worthy of serious study.

As a footnote on the issue of the Flitwick kiln and the Friary, the large M1 bowls found on the site may provide (albeit slight) evidence of a close relationship. Excavation of the kiln found large deposits of wasters with bowls typically 12 to 17 inches in diameter. A number of the Friary bowls exceed this and may represent a "mass catering" order. Additionally, one particular rim profile (15/23 in the type series) is common at the Friary but absent at Flitwick. Is this, again, a special order?

Regarding fabric M2, a local kiln site operating in the late thirteenth and fourteenth centuries is the most probable origin. No parallels have been found from any excavations outside Dunstable and the local attribution seems a safe one.

Fabric C9 has been positively identified as late thirteenth to fourteenth century product of the large Brill/Boarstall industry in Buckinghamshire. It is interesting to note that these kilns also produced coarse wares similar to those found on Friary Field but it was only the glazed wares which were considered worth transporting to Dunstable.

The origin of fabric C11A is unknown but clearly other than Brill/Boarstall. At the SEMPER meetings mentioned above, it was suggested that the stamped boss decoration often present was characteristic of a production site believed to have operated in the St Albans area but this is far from certain. If borne out, however, the reasons for a switch from early trade with western Buckinghamshire to later trade with St Albans would be worthy of speculation. The start up of a quality production site much nearer at hand would presumably change the trade economics.

A final word on the crosses. Nothing found or concluded in this report argues against the theory that they were a large, planned garden and the evidence supporting the importation of soil from elsewhere to fill the crosses lends added credence to the theory. A date in the second half of the Friary's existence also seems about right for such a project. It would seem worth seeking the opinion of experts in the field of medieval gardens. A number of books have been written on the subject and perhaps by the time the definitive report on medieval Dunstable is in preparation, we will be able to advance a stronger case.

References

1. Allen, D & Dalwood, C H. Excavations in George Street, Aylesbury. Records of Bucks Vol 25. 1985.
2. Baker, D, et al. Excavations in Bedford 1967 - 1977. Beds Arch Journal 13.
3. Evans, V. Dunstable Swan Jewel. 1982
4. Farley, M. A Medieval pottery Industry at Boarstall, Bucks. Records of Bucks Vol 24. 1982.
5. Havercroft, A B. 1974. CBA9 Newsletter 4.
6. Ivens, R J. Medieval Pottery from the 1978 Excavations at Temple Farm, Brill. Records of Bucks Vol 24. 1982.
7. Martin, A R & Bagshawe, T W. The Dominican Priory of Dunstable. J Brit Archaeol Assoc, Dec 1927.
8. Matthews, C L, et al. Dunstable Roman Cemetery. Beds Arch Journal 15.
9. Matthews, C L. Manshead Journals - various.
10. Matthews, C L & Hutchings, J B. A Roman Well at Dunstable. Beds Arch Journal 7.
11. Mynard, D C, Petchey, M R & Tilson, P G. A Medieval Pottery at Church End, Flitwick, Beds. Bedfordshire Archaeology 16. 1983.
12. Vince, A G. The Saxon and Medieval Pottery of London: A Review. Medieval Arch Vol XXIX. 1985.

Acknowledgements

The authors would like to thank everyone who has helped with this analysis. In particular Evelyn Baker and her team with a special thank you to Georgie Brine; Alan Vince and his team at the Museum of London; Mike Farley; the members of SEMPER for their helpful suggestions; Joan Schneider for the final drawings; John Hitchcock for the plans; Dave Warren for preparing the drawings for reduction; and finally all those members of the Society who helped sort the pottery and do the initial drawings.